SOLIS SIGNAL BLOCK DIAGRAM

(VIETMOBILE.VN)

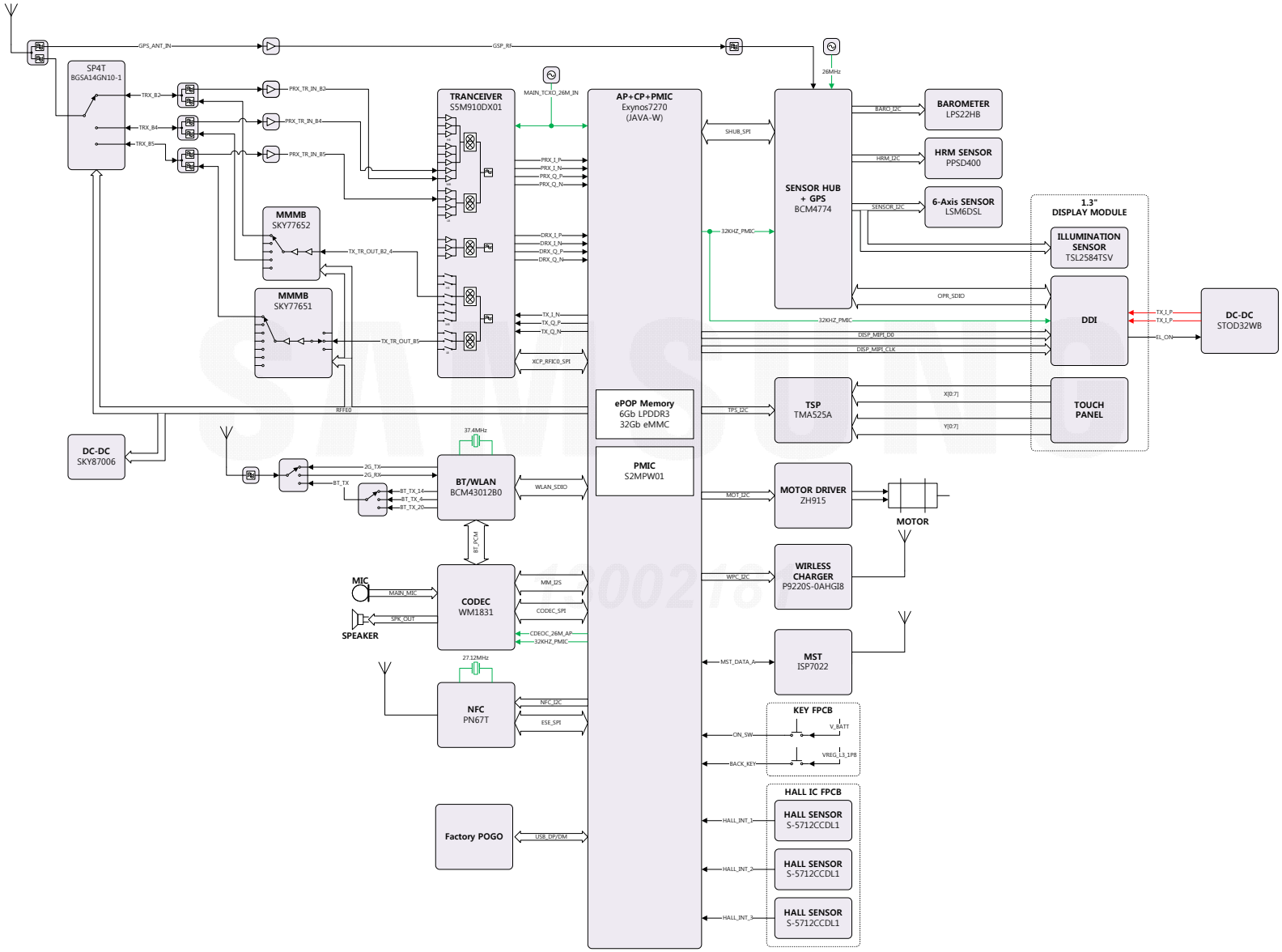

SOLIS POWER BLOCK DIAGRAM

(VIETMOBILE.VN)

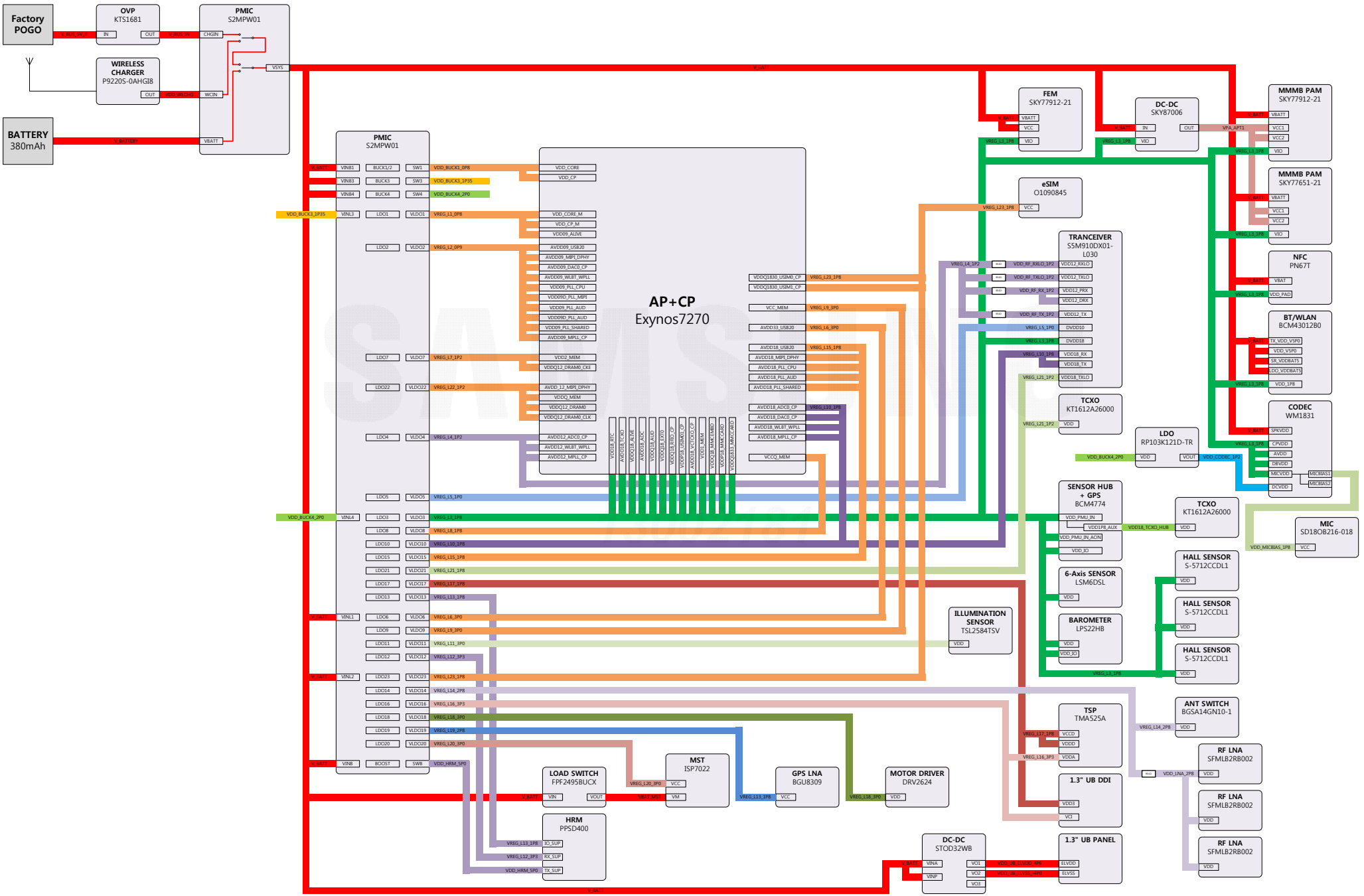

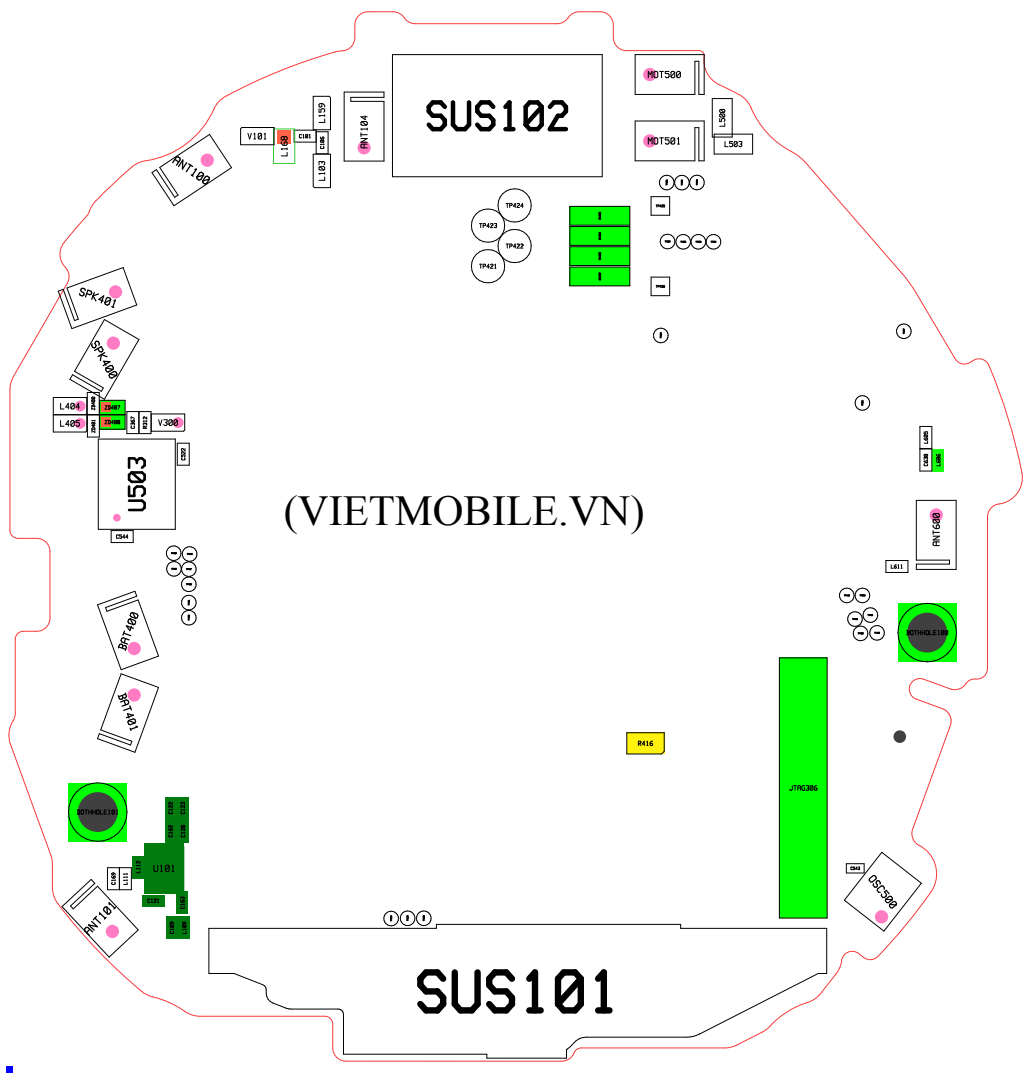

(VIETMOBILE.VN)

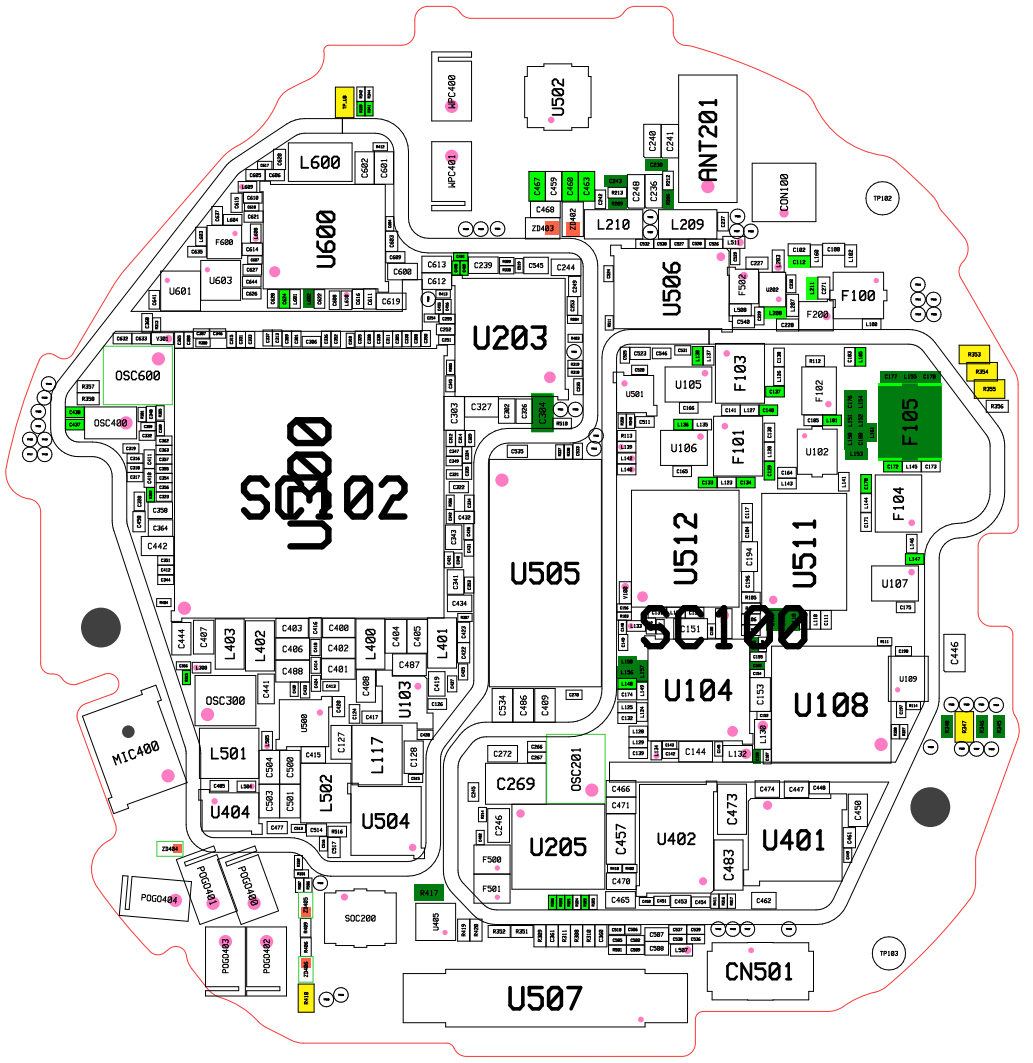
U502
ANT201
HPC400
HPC401
CDN100
TP102
L600
U600
L210
L209
U506
U203
F100
F200
OSC600
OSC400
U300
U102
U505
U512
U511
F105
F104
U107
U104
U108
U109
OSC300
MIC400
L501
U404
L502
L117
U103
U504
OSC201
C269
U205
U402
U401
POGO404
POGO401
POGO400
POGO403
POGO402
SOC200
U405
CN501
TP103
U507

8. Level 3 Repair

8-3. Flow chart of Trouble shooting.

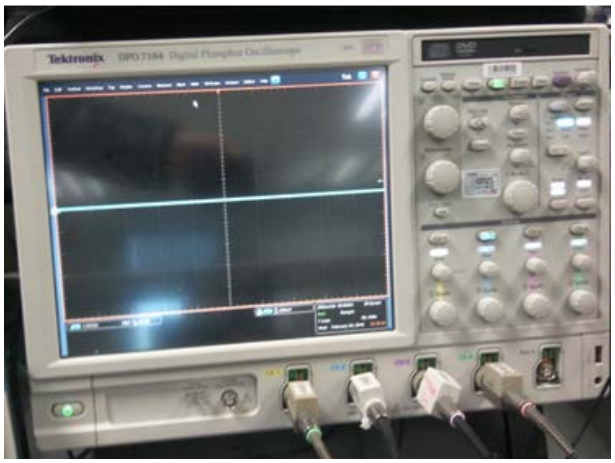	
Oscilloscope	**Digital Multimeter**
	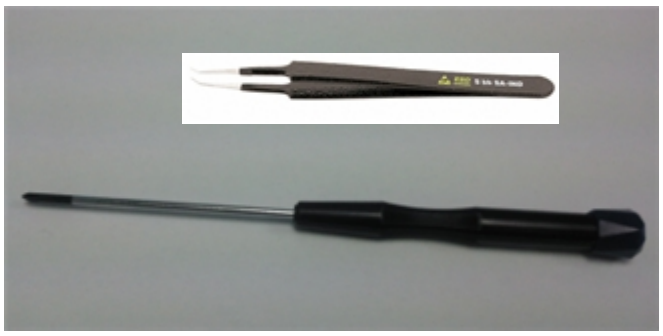
Power Supply	**Y/+ driver, ESD Safe Tweezer**
Soldering iron	

Confidential and proprietary-the contents in this service guide subject to change without prior notice
Distribution, transmission, or infringement of any content or data from this document without Samsung's written authorization is strictly prohibited.

8-4-1. Power On

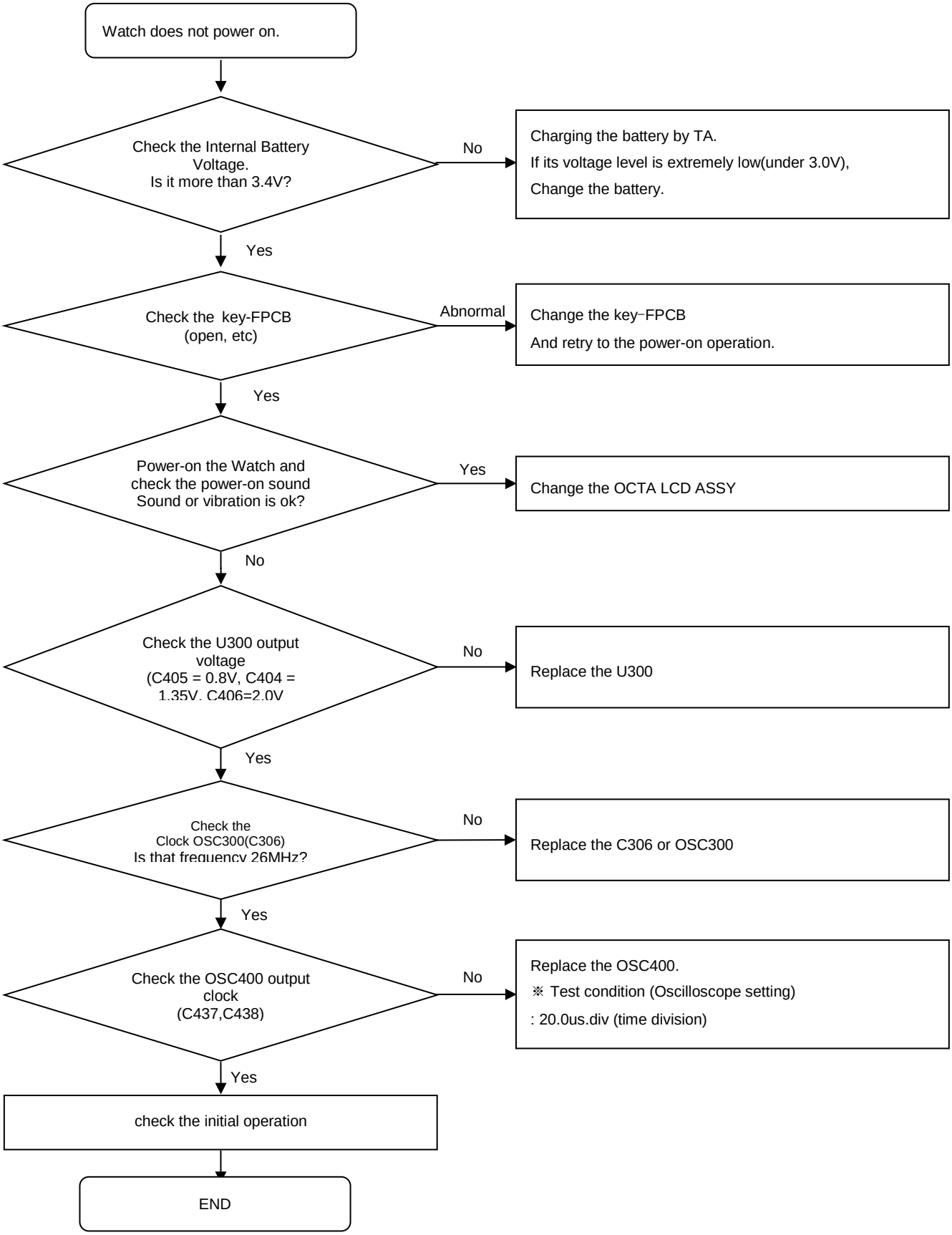

Confidential and proprietary-the contents in this service guide subject to change without prior notice
Distribution, transmission, or infringement of any content or data from this document without Samsung's written authorization is strictly prohibited.

8. Level 3 Repair

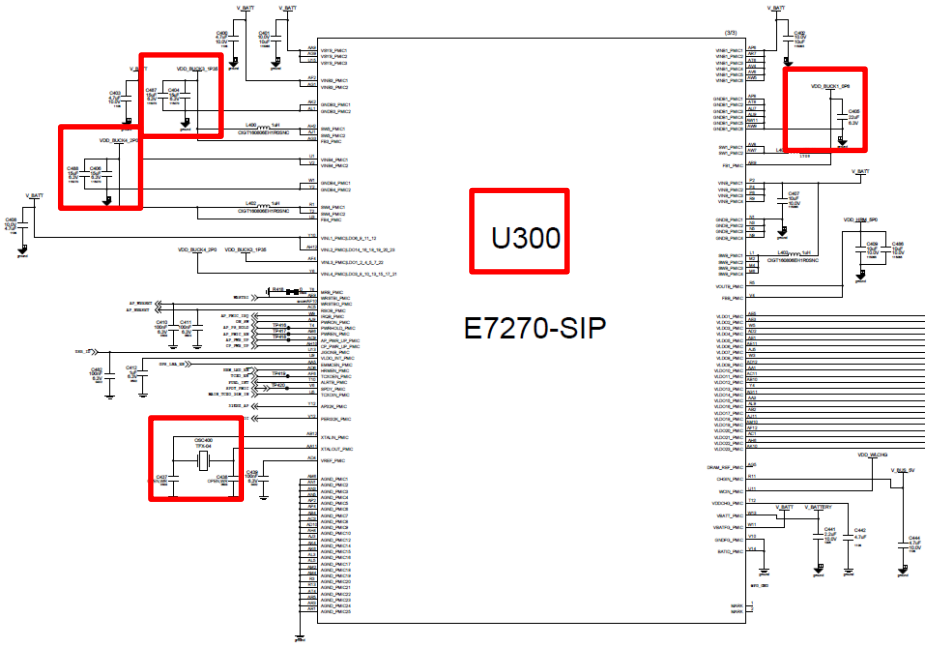

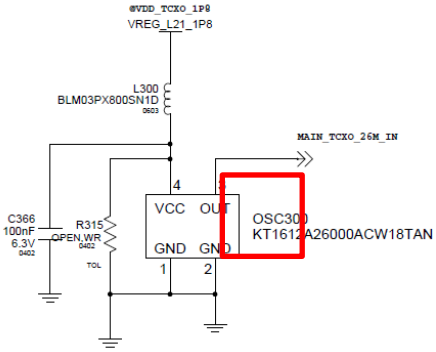

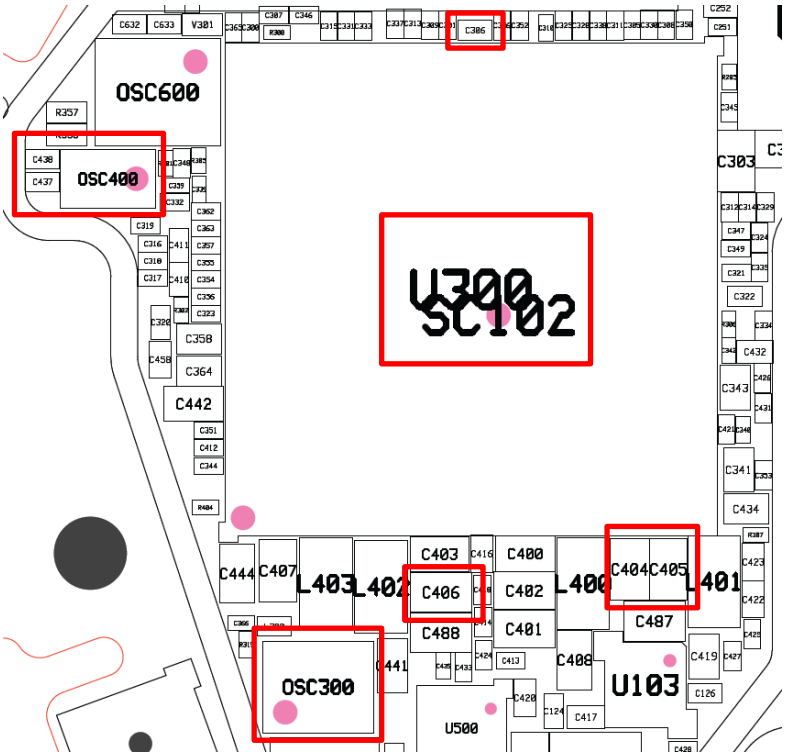

Confidential and proprietary-the contents in this service guide subject to change without prior notice
Distribution, transmission, or infringement of any content or data from this document without Samsung's written authorization is strictly prohibited.

8-4-2. Initial (Lock up)

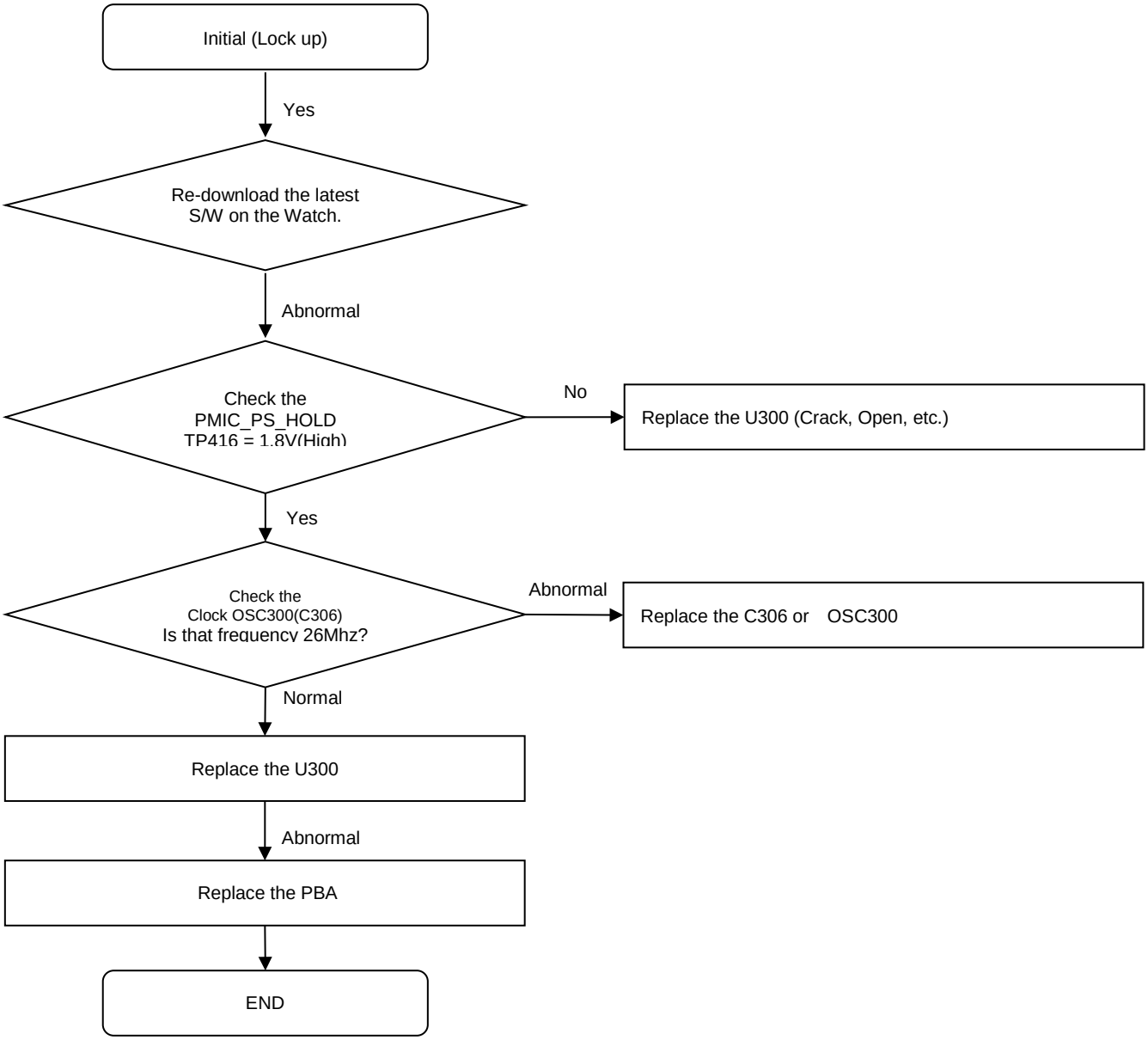

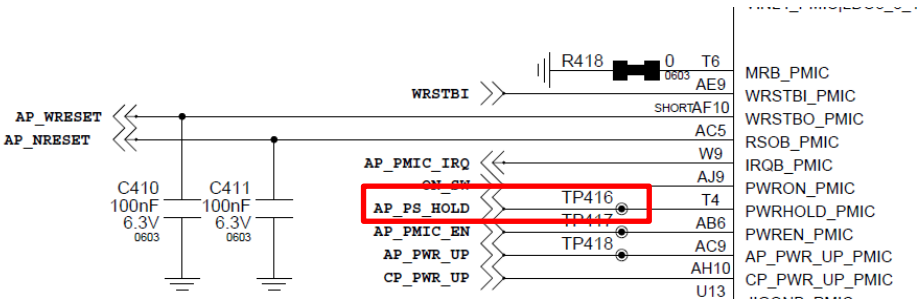

Confidential and proprietary-the contents in this service guide subject to change without prior notice
Distribution, transmission, or infringement of any content or data from this document without Samsung's written authorization is strictly prohibited.

8-4-3. Charging Part

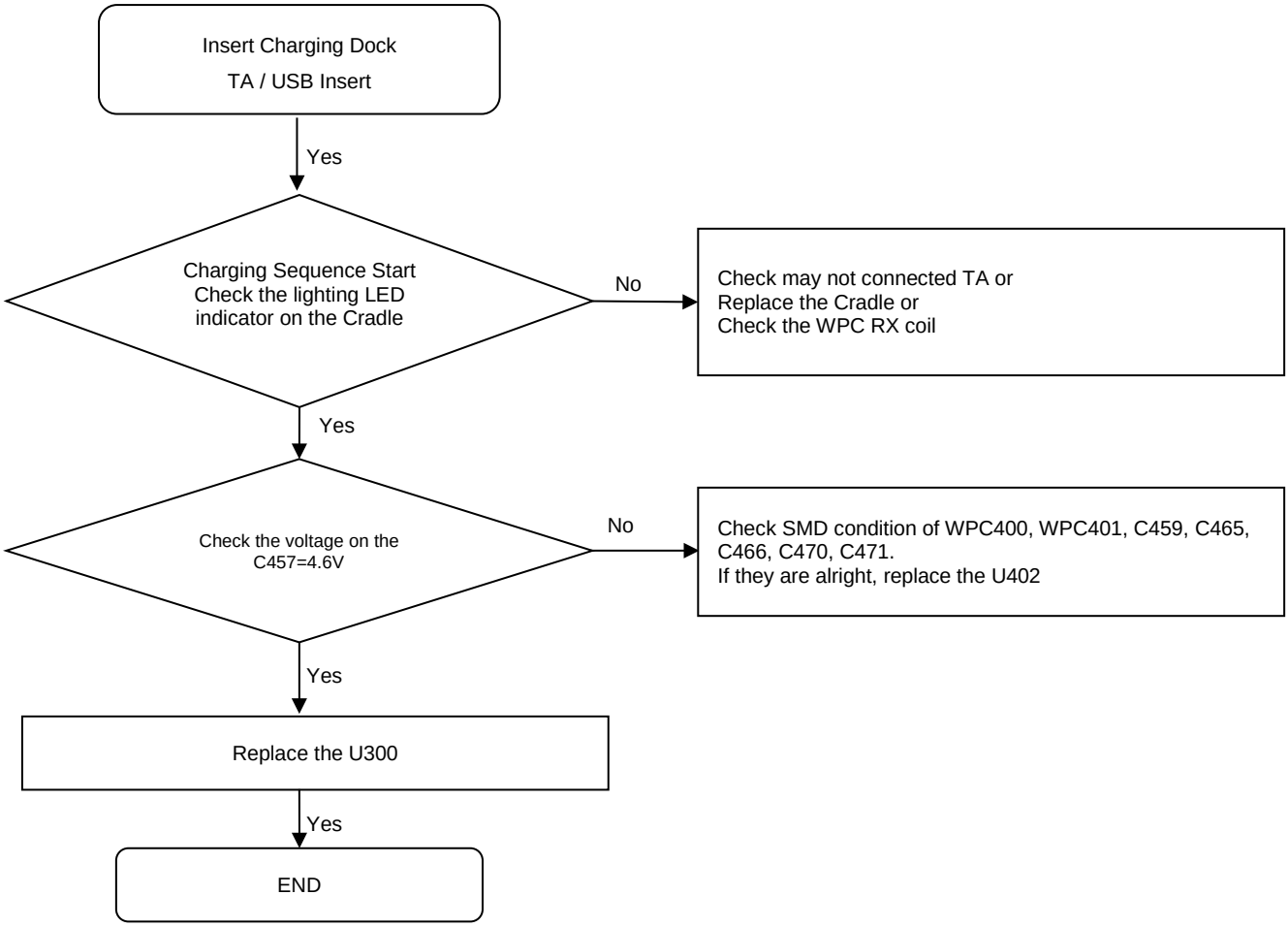

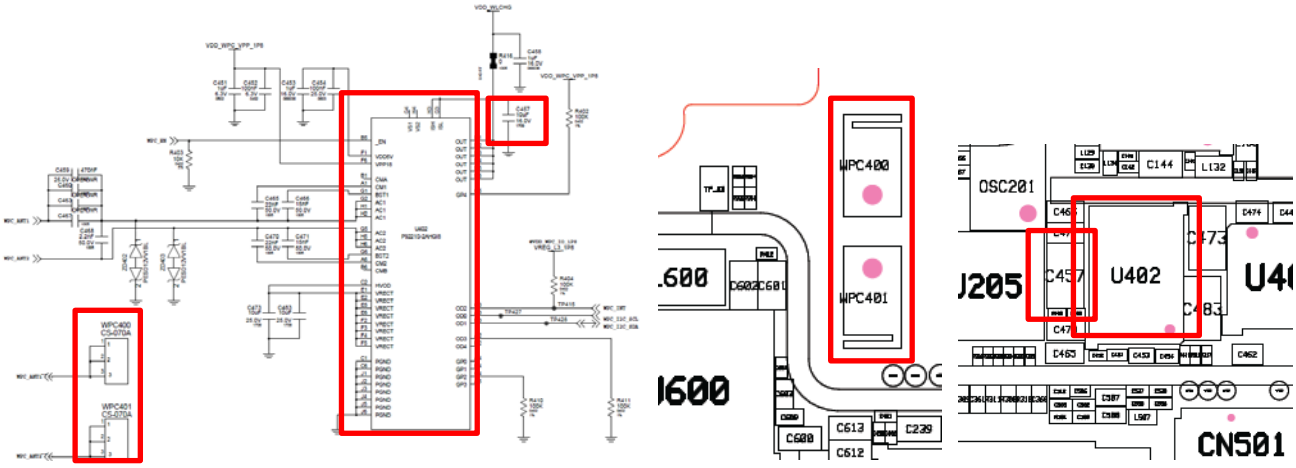

Confidential and proprietary-the contents in this service guide subject to change without prior notice

Distribution, transmission, or infringement of any content or data from this document without Samsung's written authorization is strictly prohibited.

8-4-4. BT/WIFI

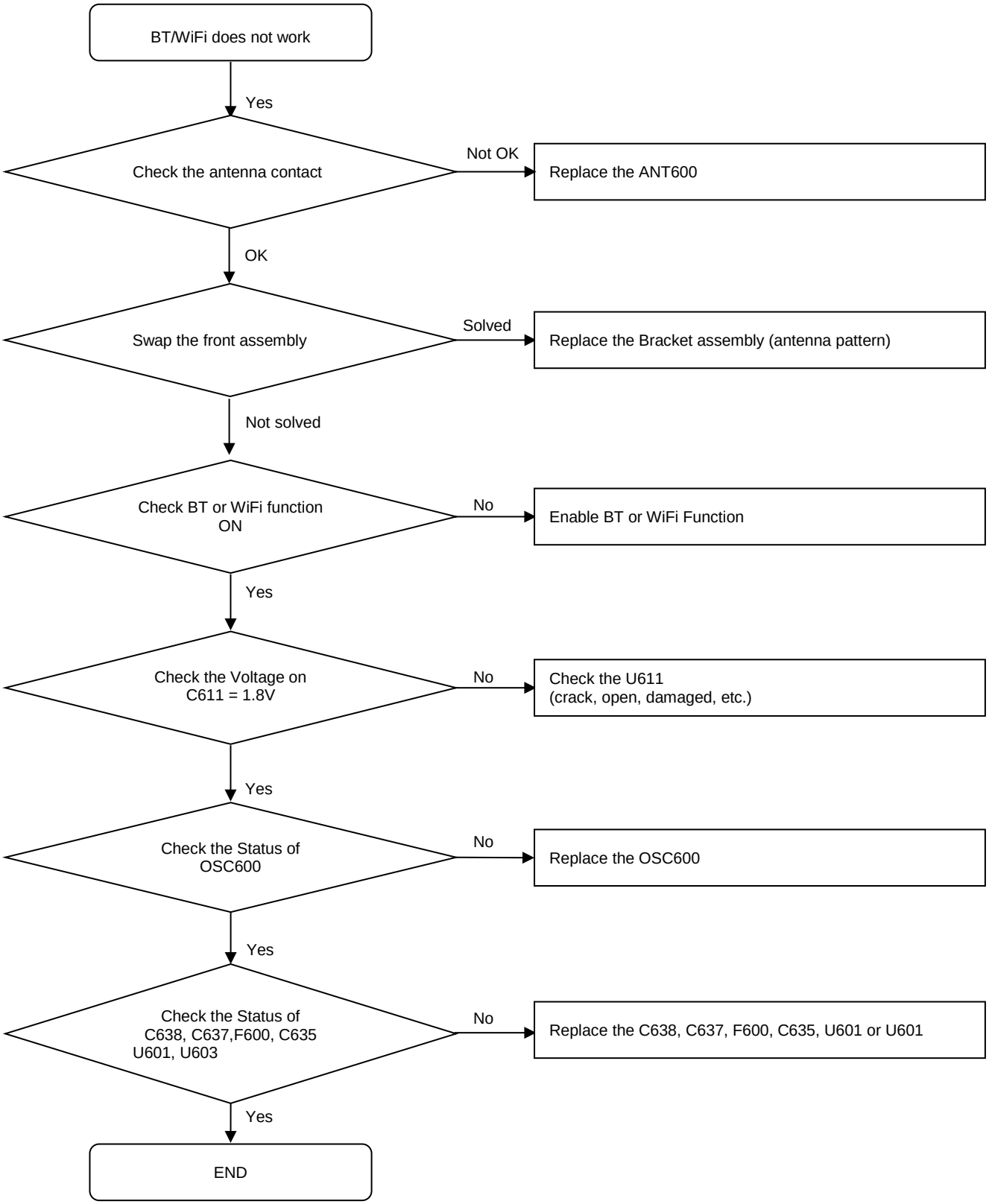

Confidential and proprietary-the contents in this service guide subject to change without prior notice
Distribution, transmission, or infringement of any content or data from this document without Samsung's written authorization is strictly prohibited.

8. Level 3 Repair

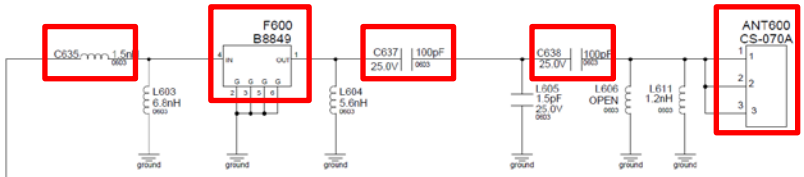

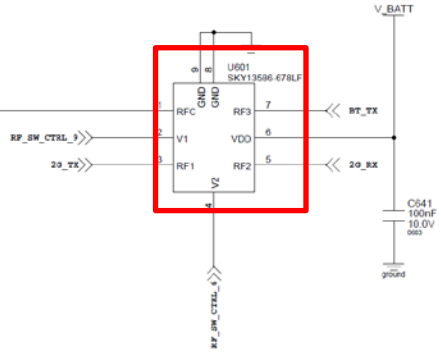

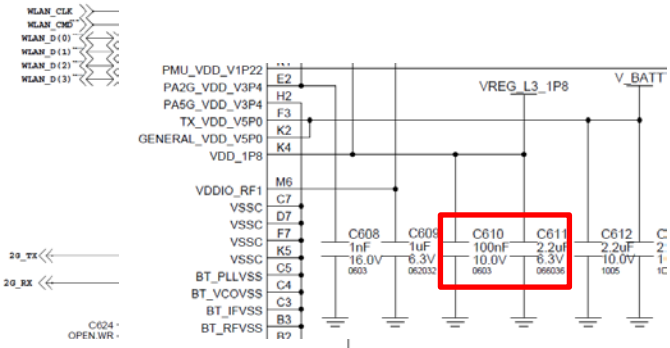

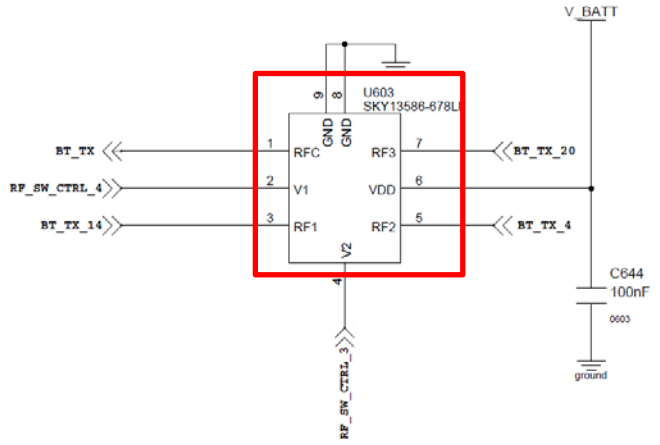

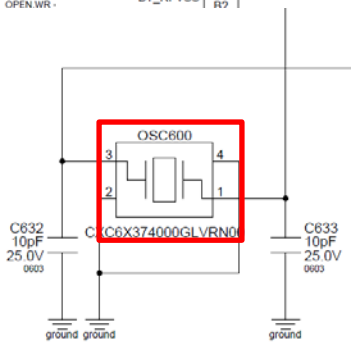

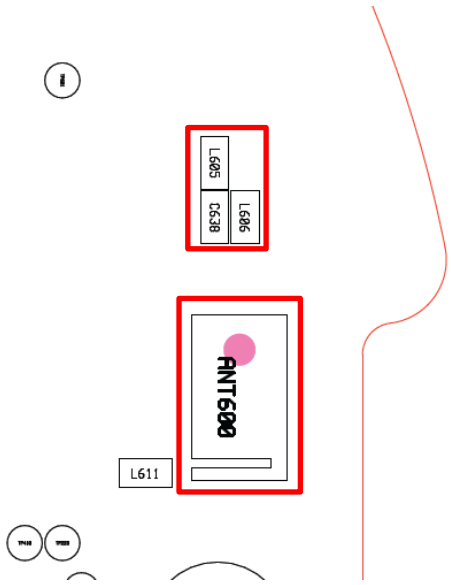

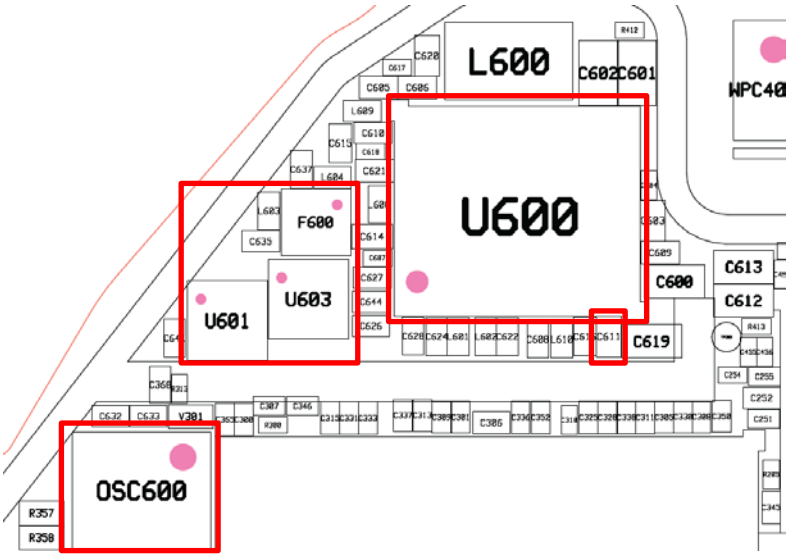

Confidential and proprietary-the contents in this service guide subject to change without prior notice
Distribution, transmission, or infringement of any content or data from this document without Samsung's written authorization is strictly prohibited.

8-4-5 MOTOR

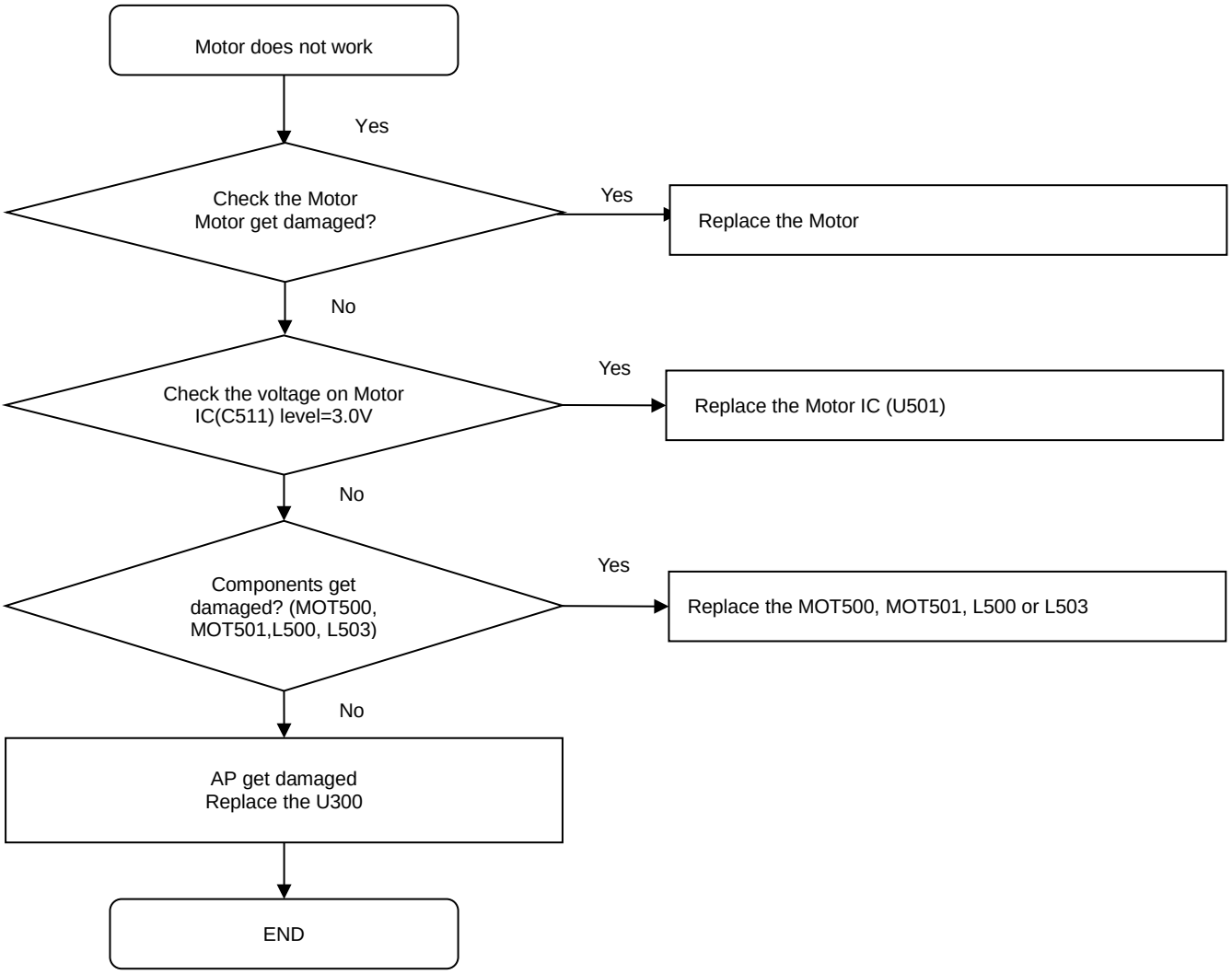

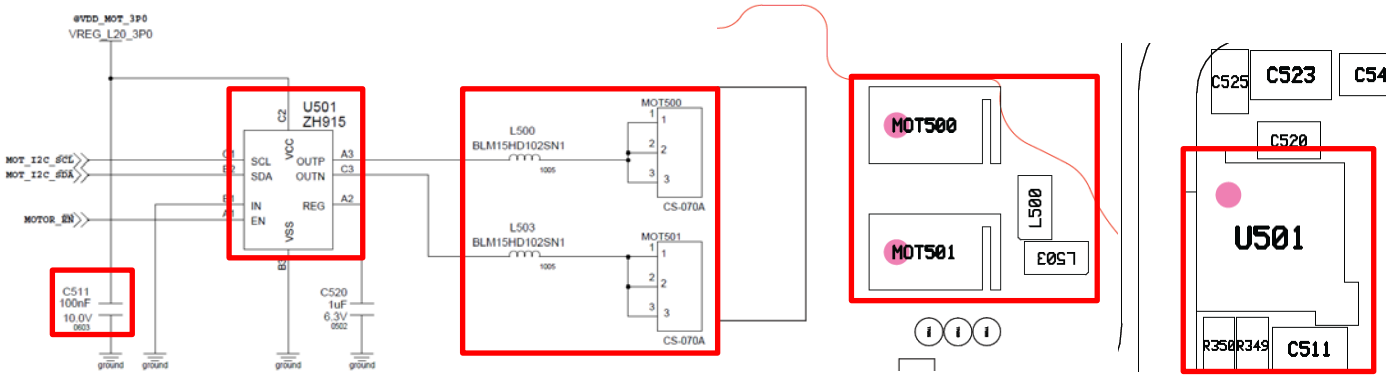

Confidential and proprietary-the contents in this service guide subject to change without prior notice
Distribution, transmission, or infringement of any content or data from this document without Samsung's written authorization is strictly prohibited.

8-4-6 UB(Display part)

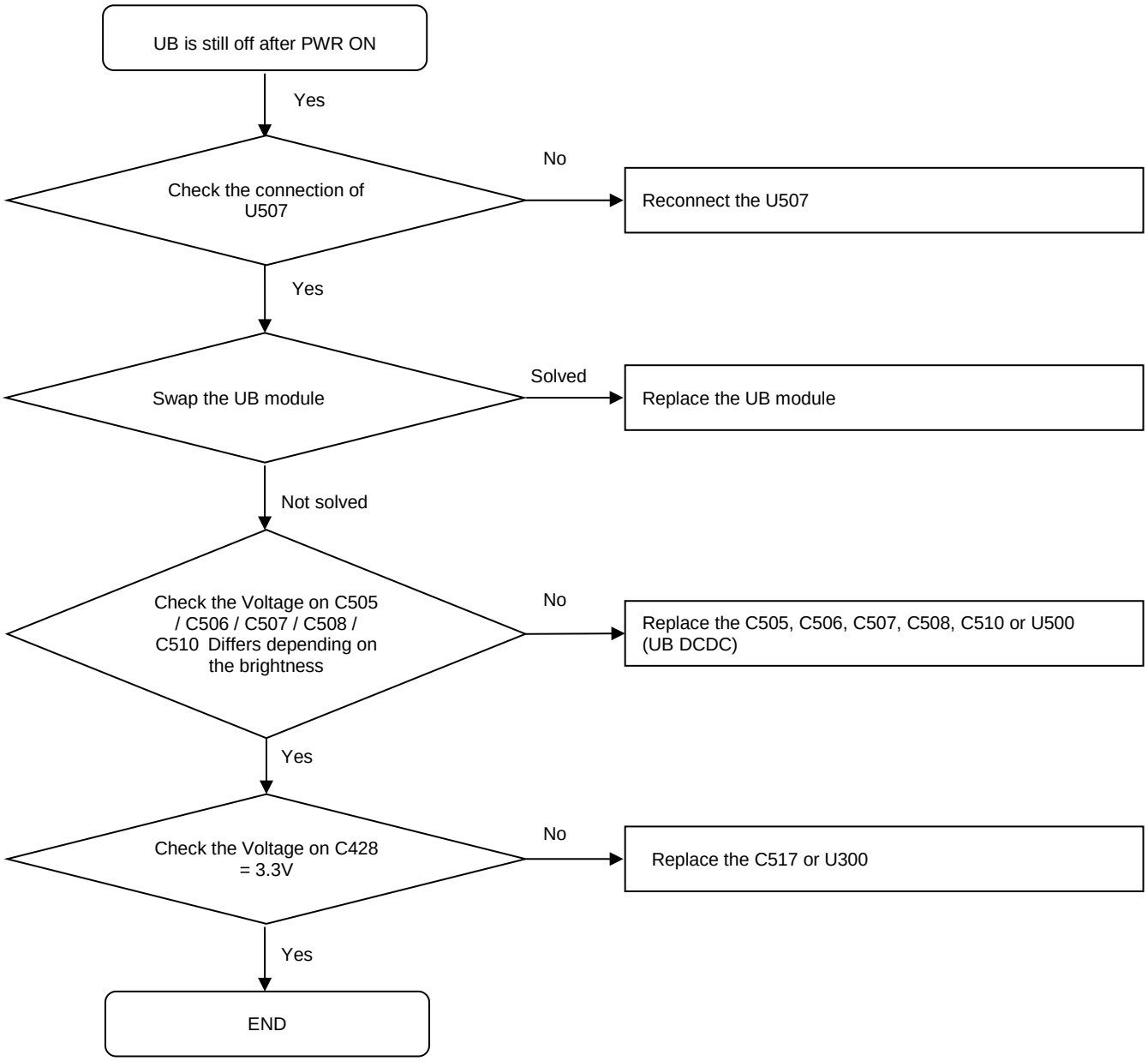

Confidential and proprietary-the contents in this service guide subject to change without prior notice
Distribution, transmission, or infringement of any content or data from this document without Samsung's written authorization is strictly prohibited.

8. Level 3 Repair

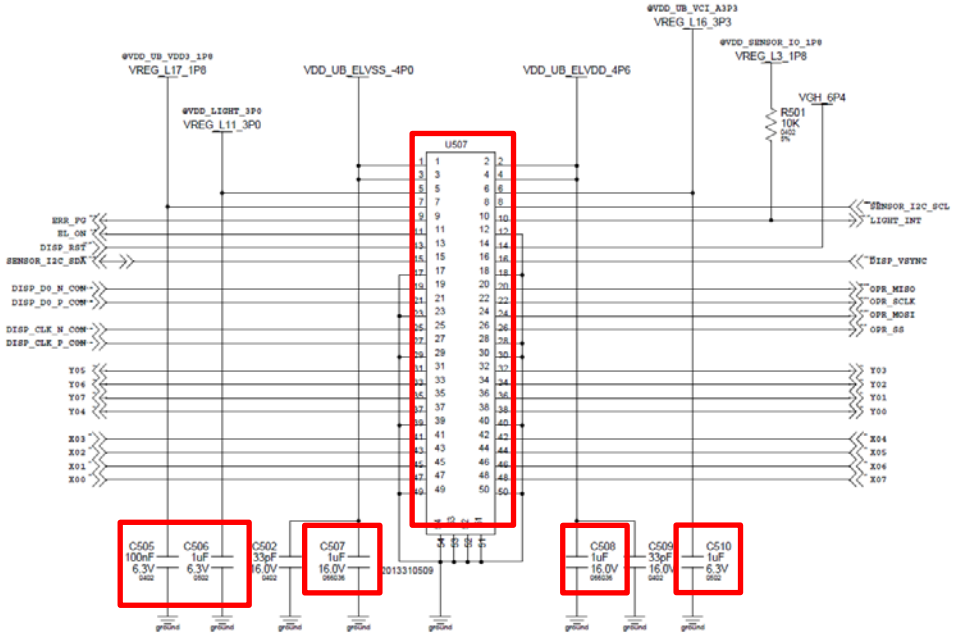

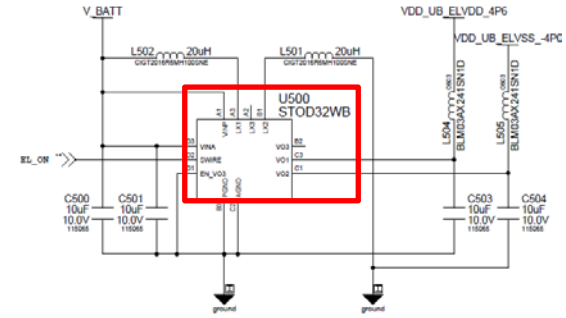

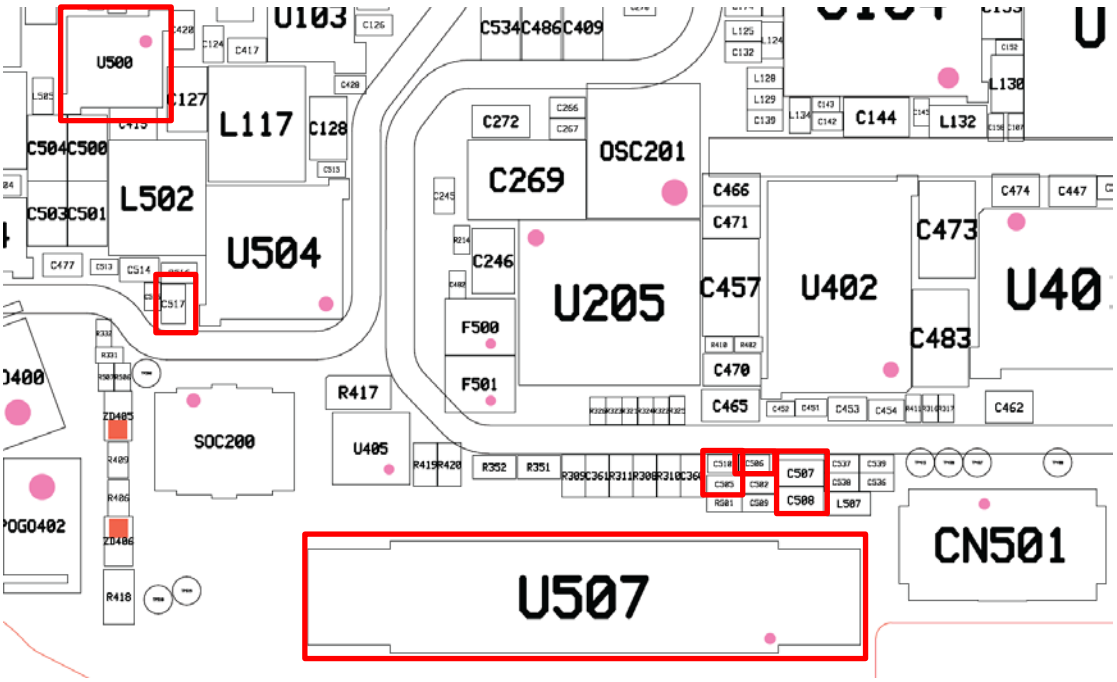

Confidential and proprietary-the contents in this service guide subject to change without prior notice
Distribution, transmission, or infringement of any content or data from this document without Samsung's written authorization is strictly prohibited.

8-4-7 TSP

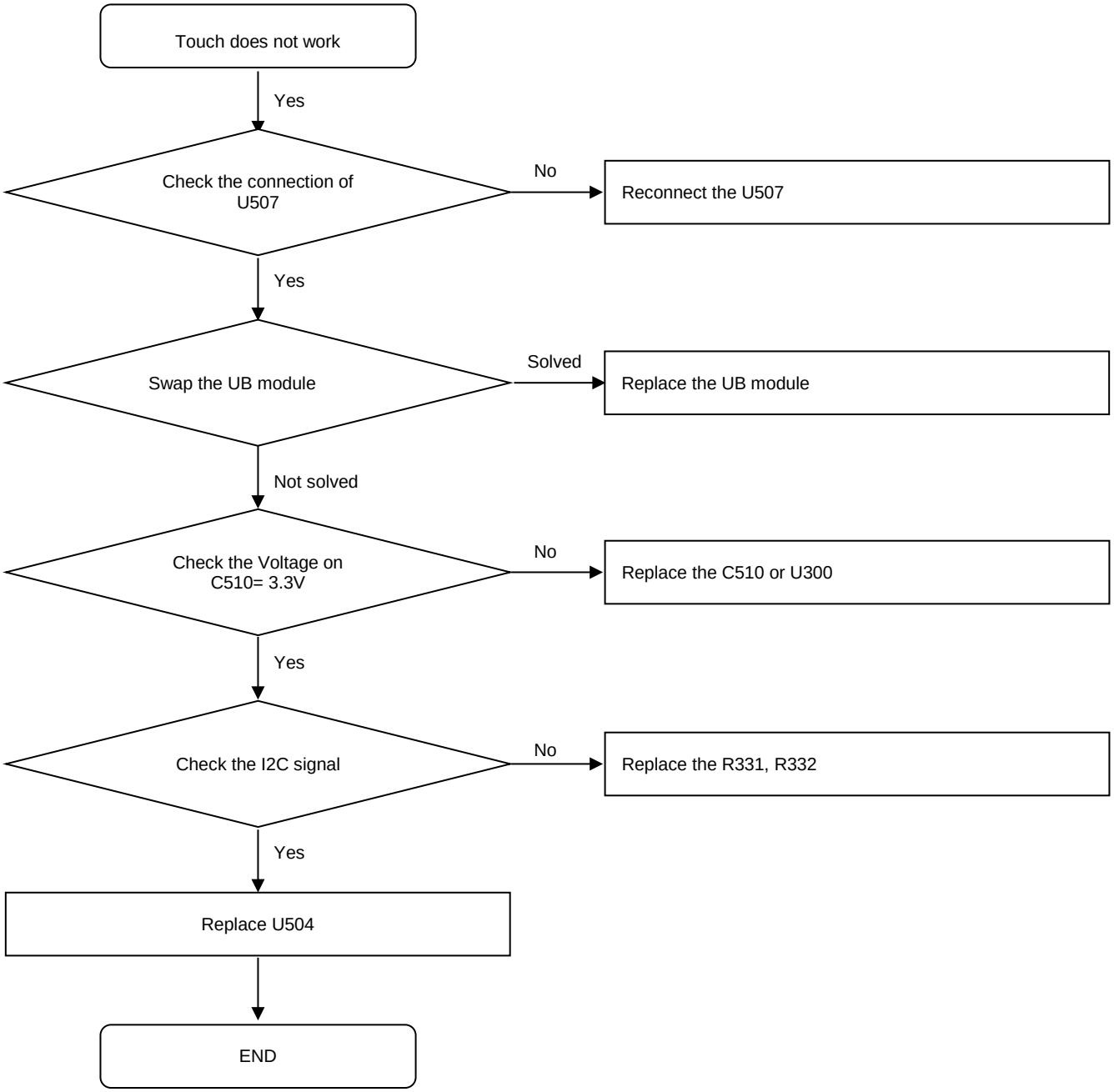

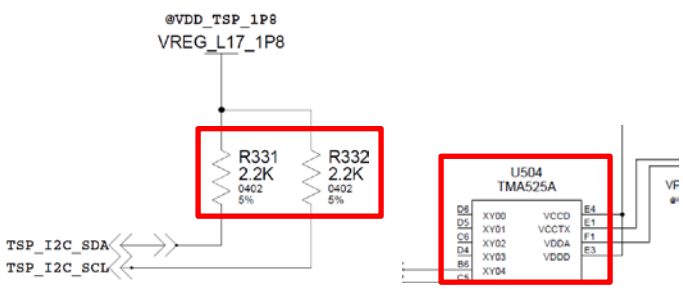

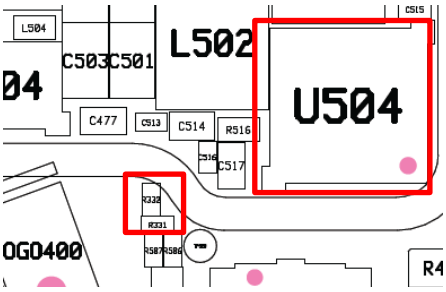

Confidential and proprietary-the contents in this service guide subject to change without prior notice
Distribution, transmission, or infringement of any content or data from this document without Samsung's written authorization is strictly prohibited.

8-4-8 GPS

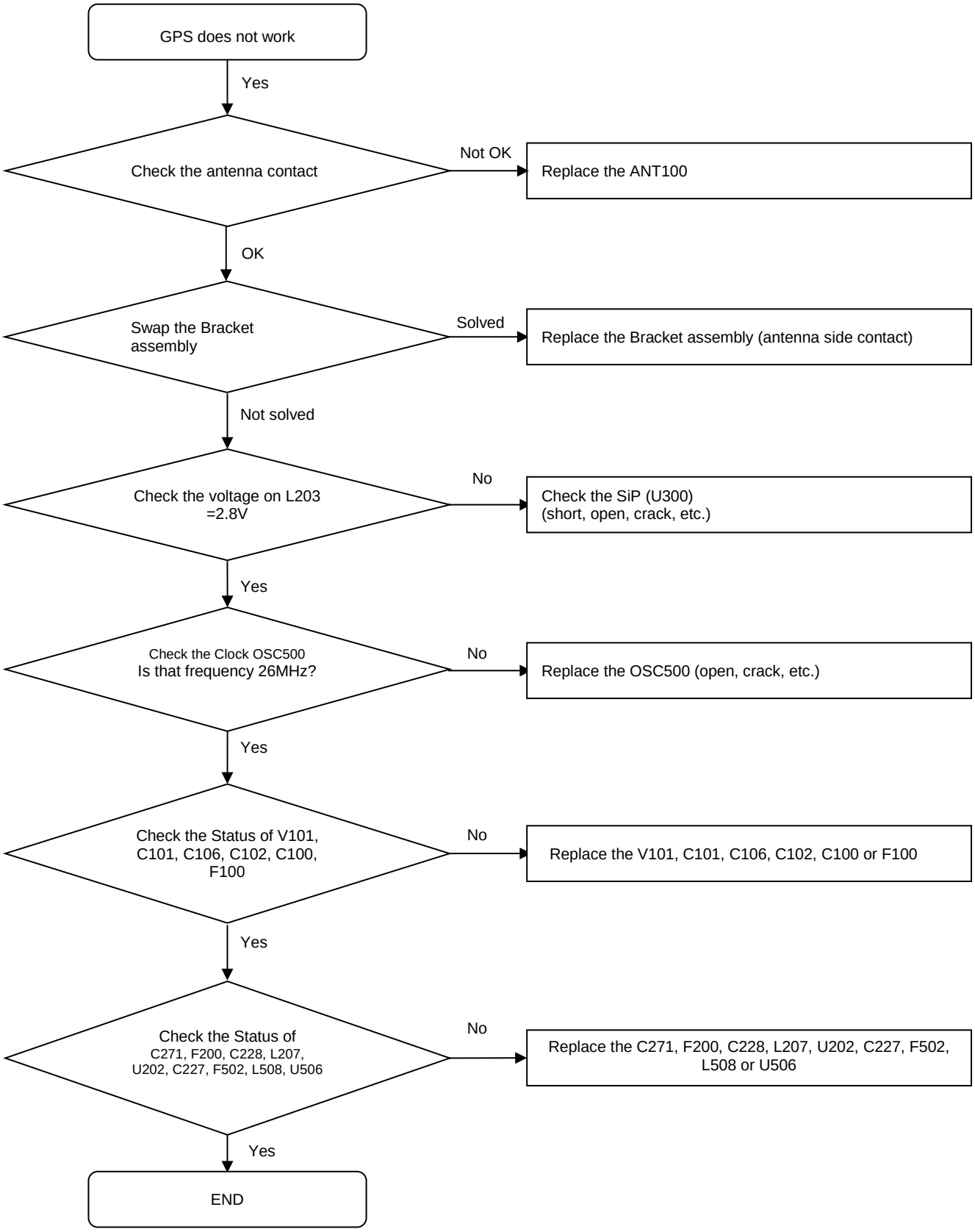

Confidential and proprietary-the contents in this service guide subject to change without prior notice
Distribution, transmission, or infringement of any content or data from this document without Samsung's written authorization is strictly prohibited.

8. Level 3 Repair

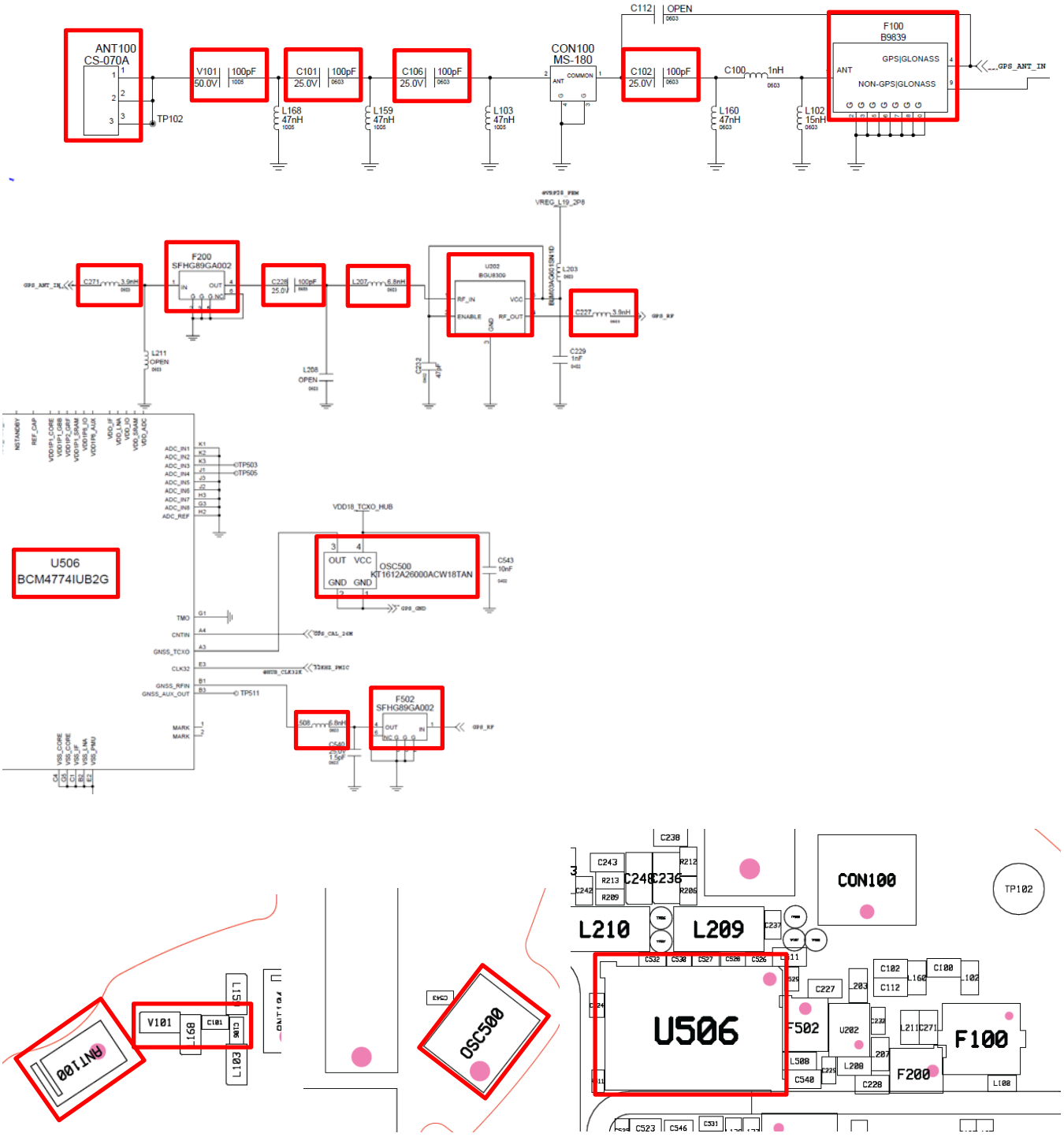

Confidential and proprietary-the contents in this service guide subject to change without prior notice
Distribution, transmission, or infringement of any content or data from this document without Samsung's written authorization is strictly prohibited.

8-4-9 Sensor

8-4-9-1 HRM Sensor

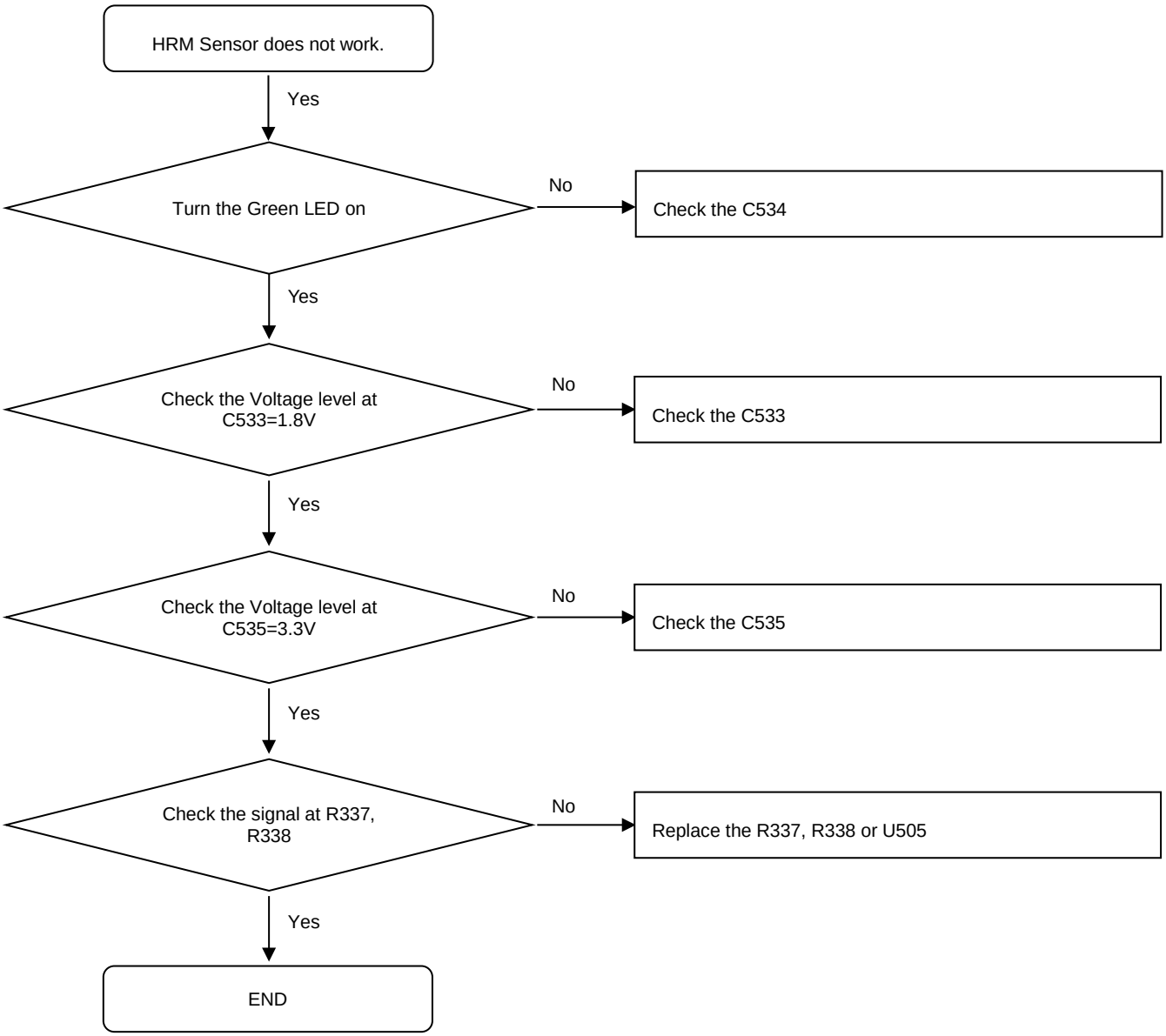

Confidential and proprietary-the contents in this service guide subject to change without prior notice
Distribution, transmission, or infringement of any content or data from this document without Samsung's written authorization is strictly prohibited.

8. Level 3 Repair

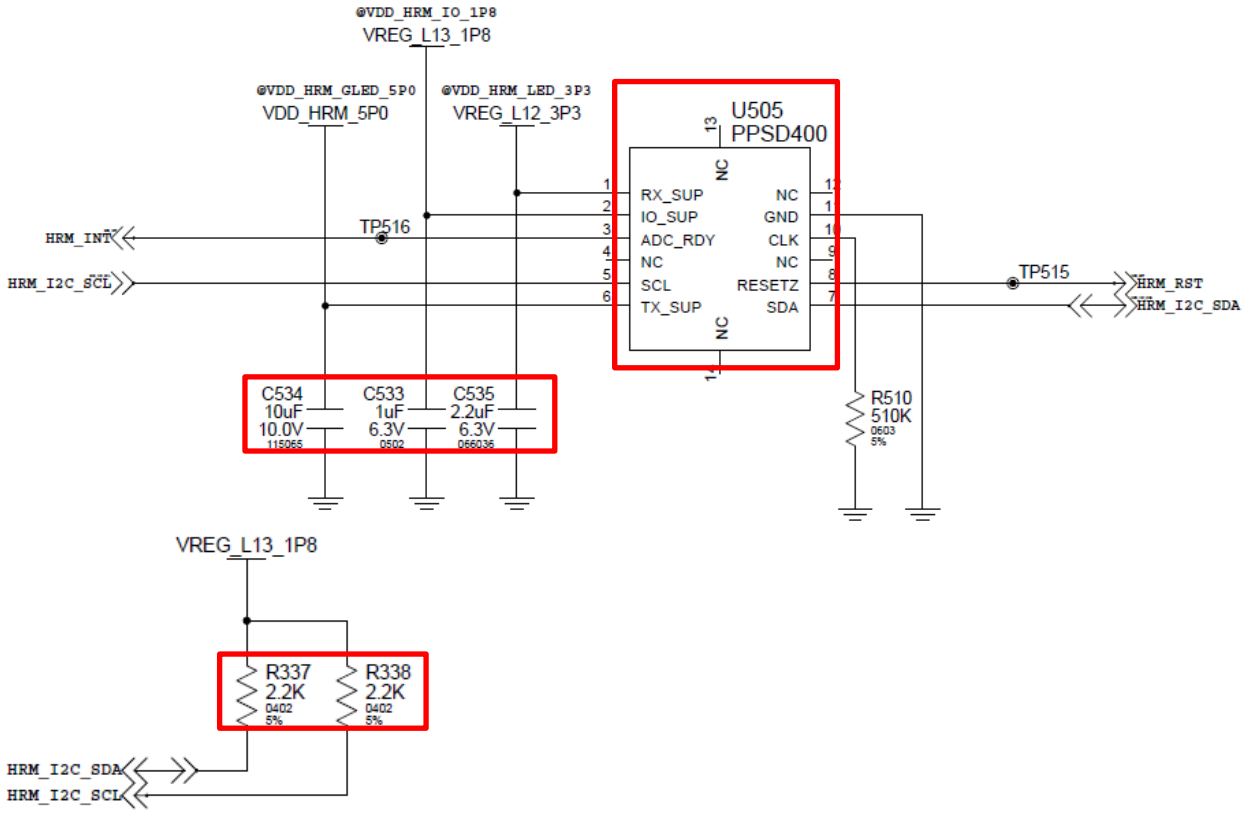

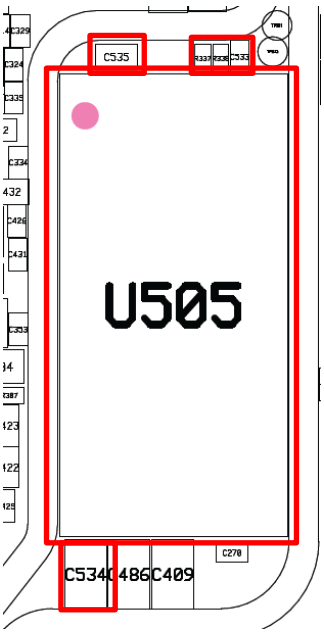

Confidential and proprietary-the contents in this service guide subject to change without prior notice
Distribution, transmission, or infringement of any content or data from this document without Samsung's written authorization is strictly prohibited.

8-4-9-2 6-Axis Sensor

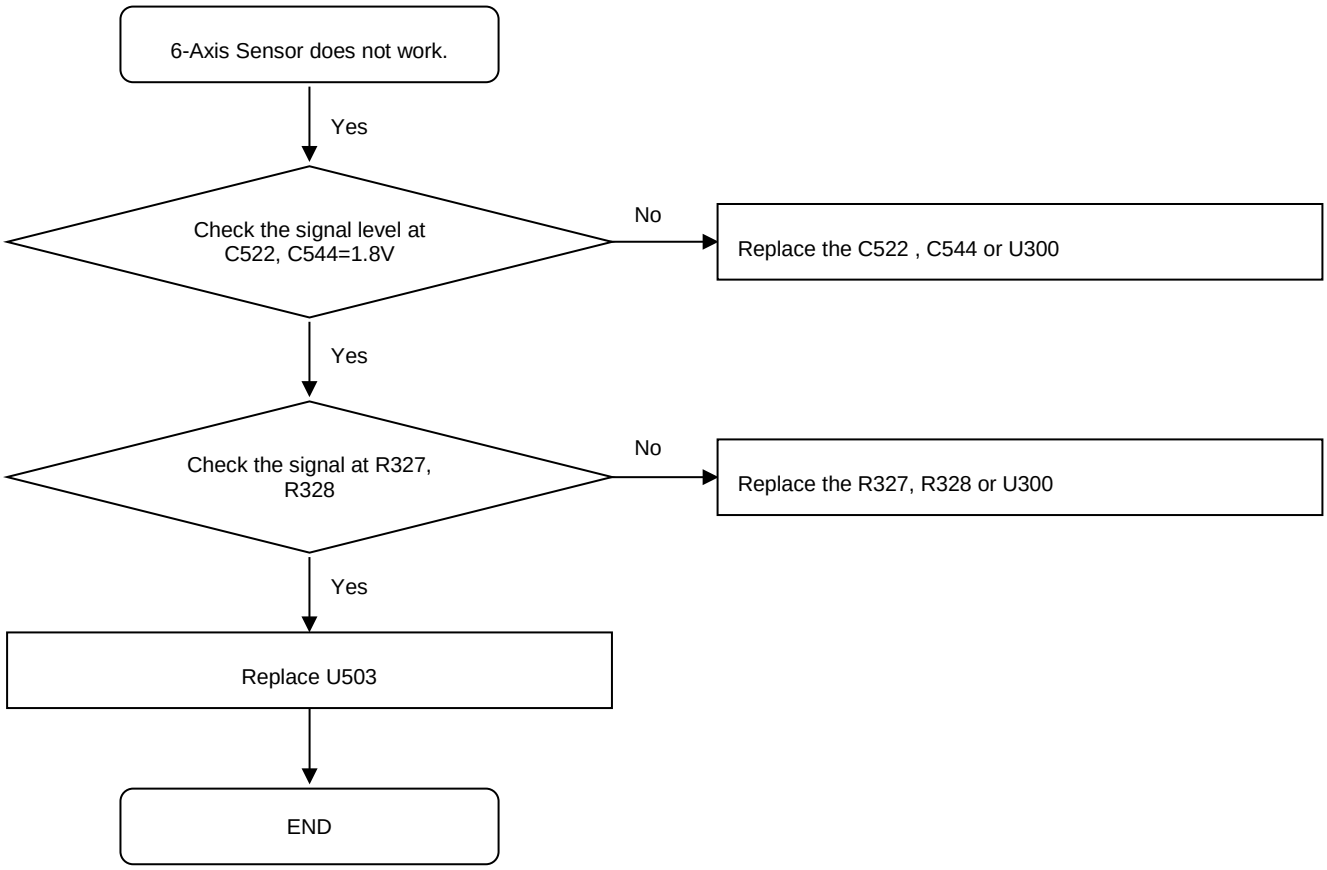

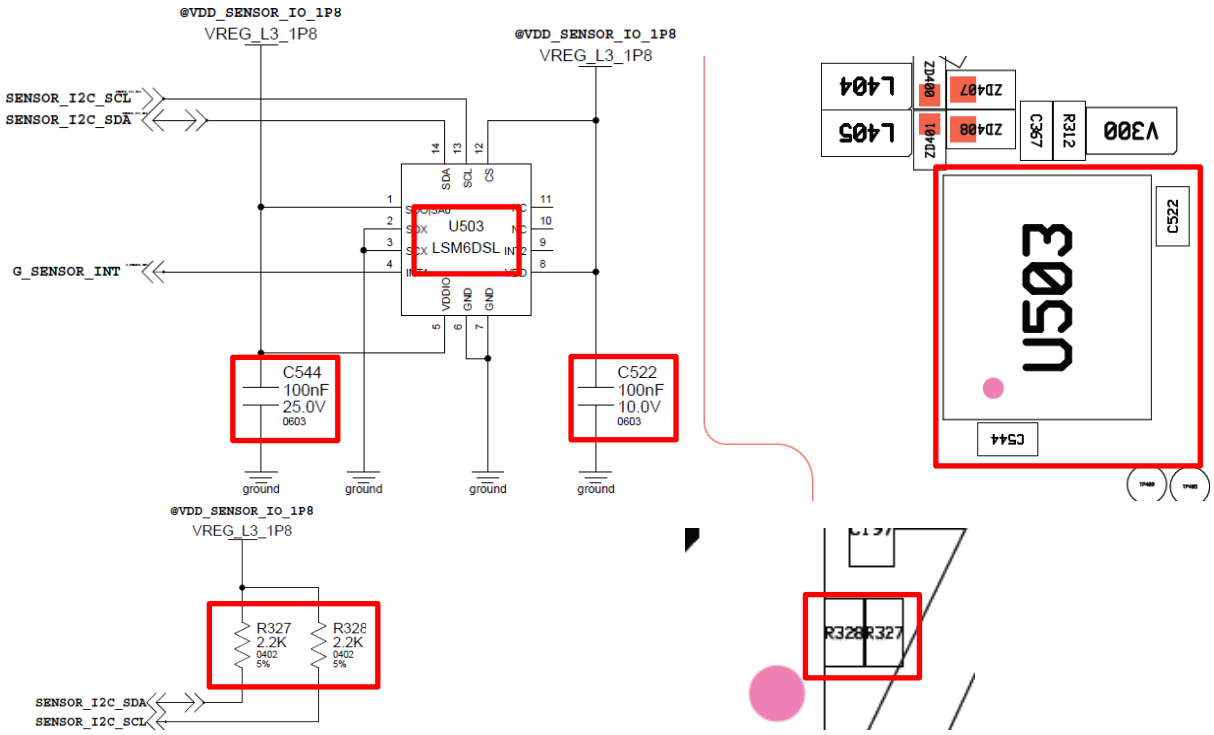

Confidential and proprietary-the contents in this service guide subject to change without prior notice
Distribution, transmission, or infringement of any content or data from this document without Samsung's written authorization is strictly prohibited.

8-4-9-3 Barometer

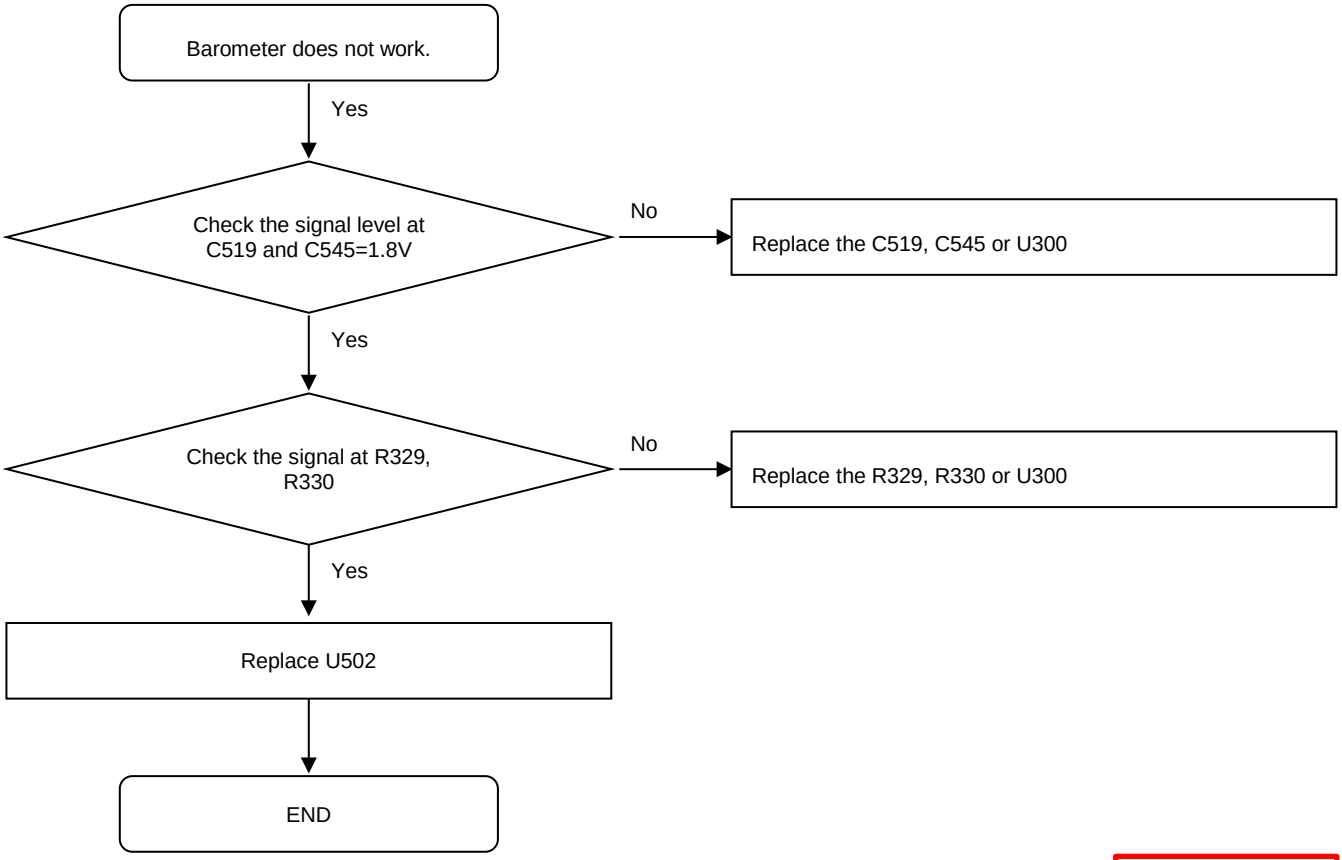

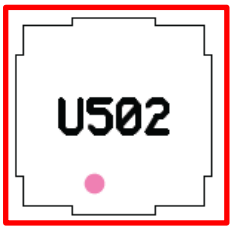

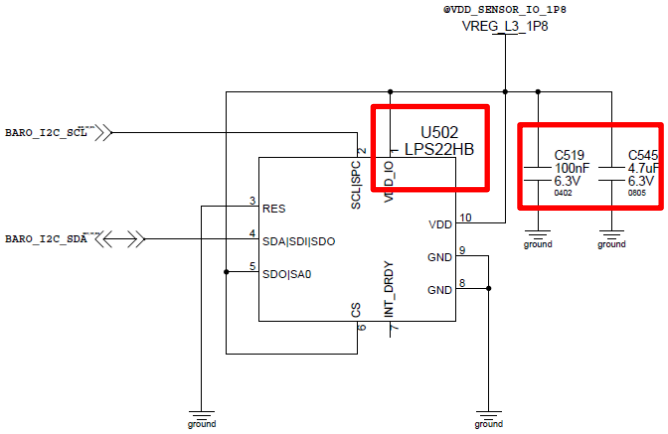

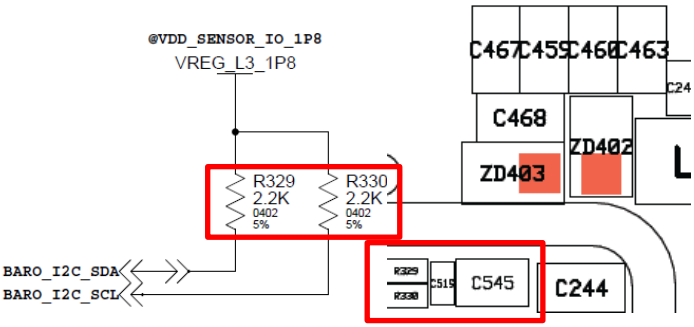

Confidential and proprietary-the contents in this service guide subject to change without prior notice
Distribution, transmission, or infringement of any content or data from this document without Samsung's written authorization is strictly prohibited.

8-4-10 Microphone Part

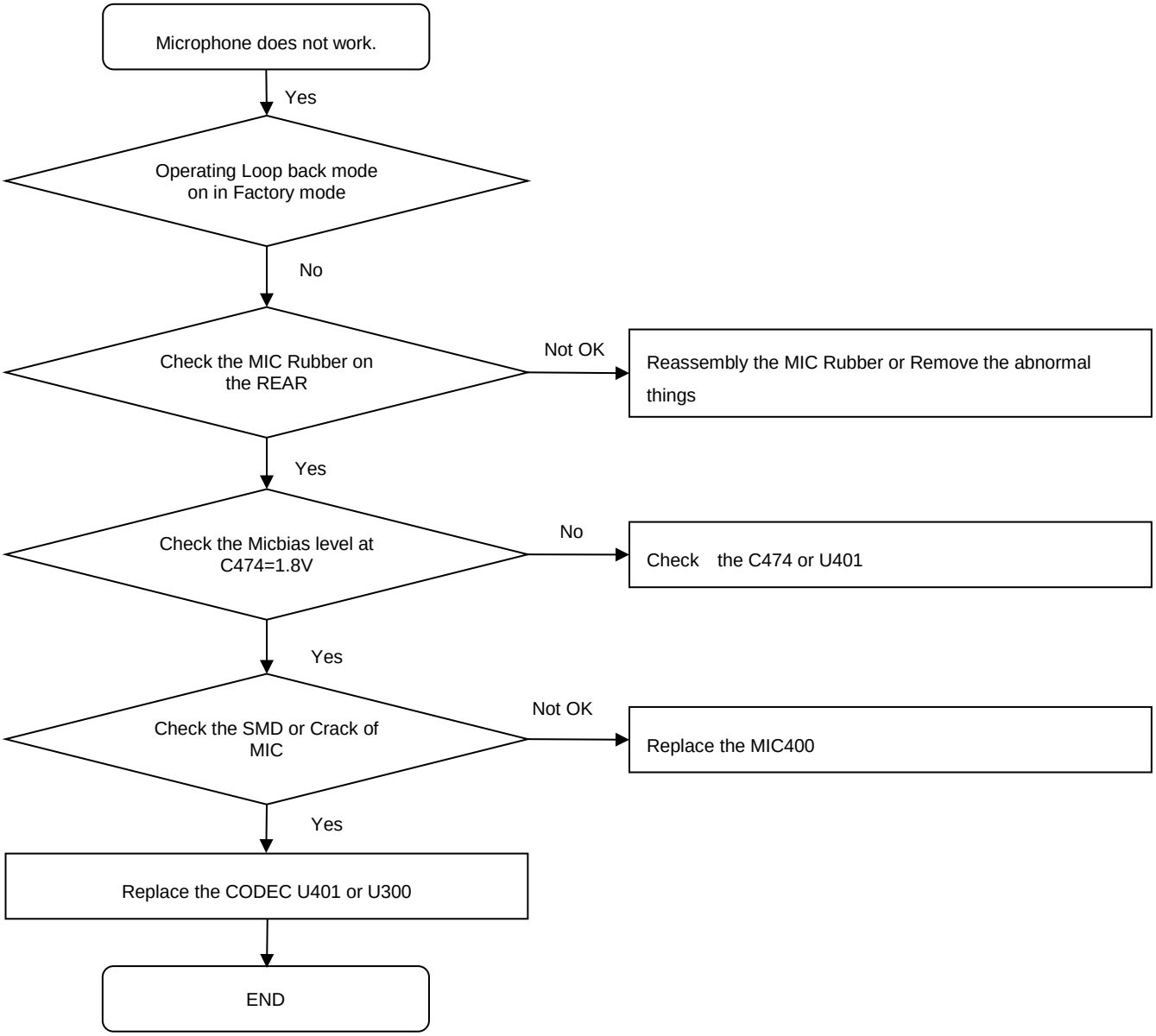

Confidential and proprietary-the contents in this service guide subject to change without prior notice
Distribution, transmission, or infringement of any content or data from this document without Samsung's written authorization is strictly prohibited.

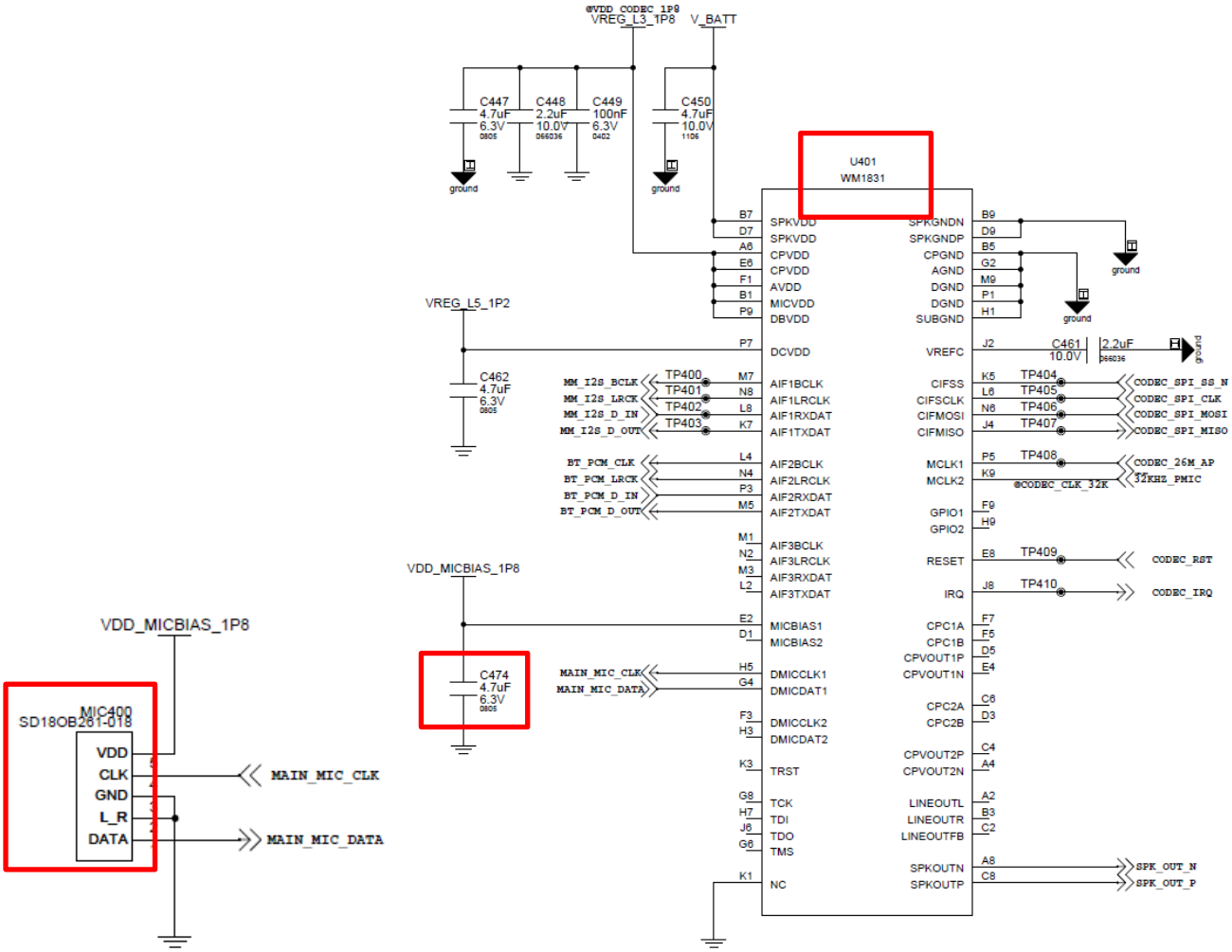

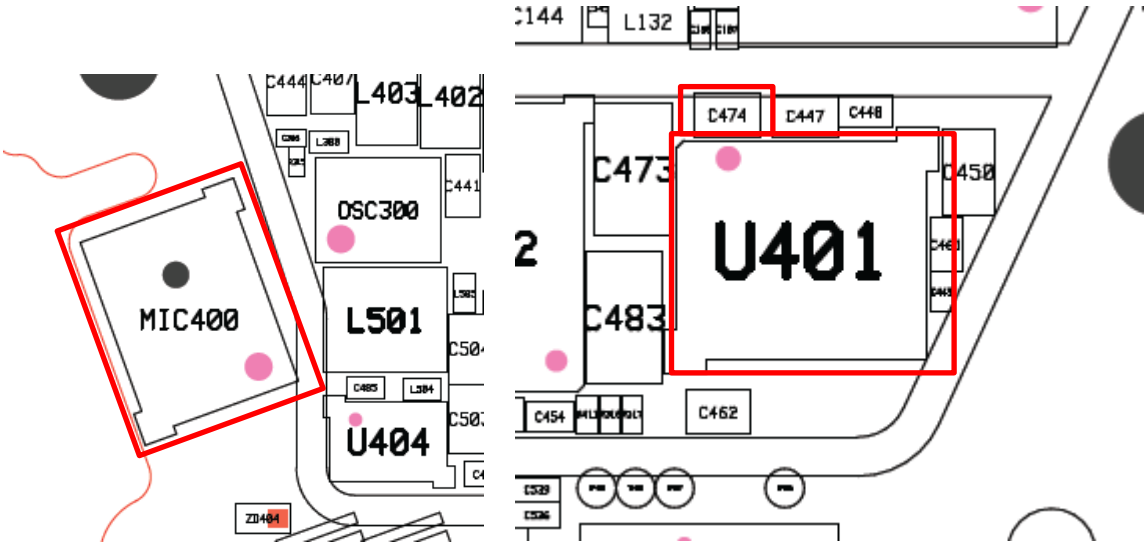

Confidential and proprietary-the contents in this service guide subject to change without prior notice
Distribution, transmission, or infringement of any content or data from this document without Samsung's written authorization is strictly prohibited.

8-4-11 Speaker Part

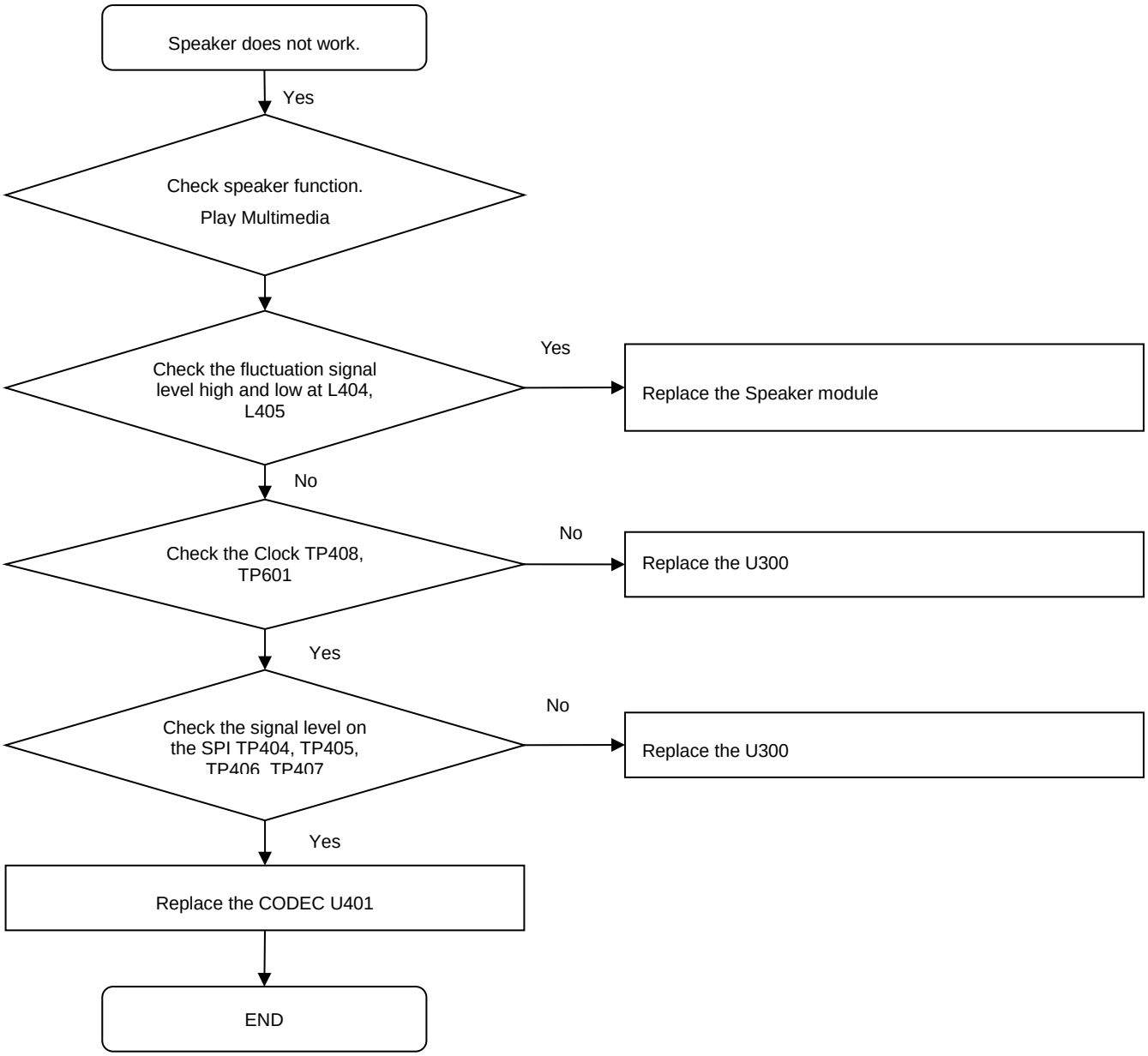

Confidential and proprietary-the contents in this service guide subject to change without prior notice
Distribution, transmission, or infringement of any content or data from this document without Samsung's written authorization is strictly prohibited.

8. Level 3 Repair

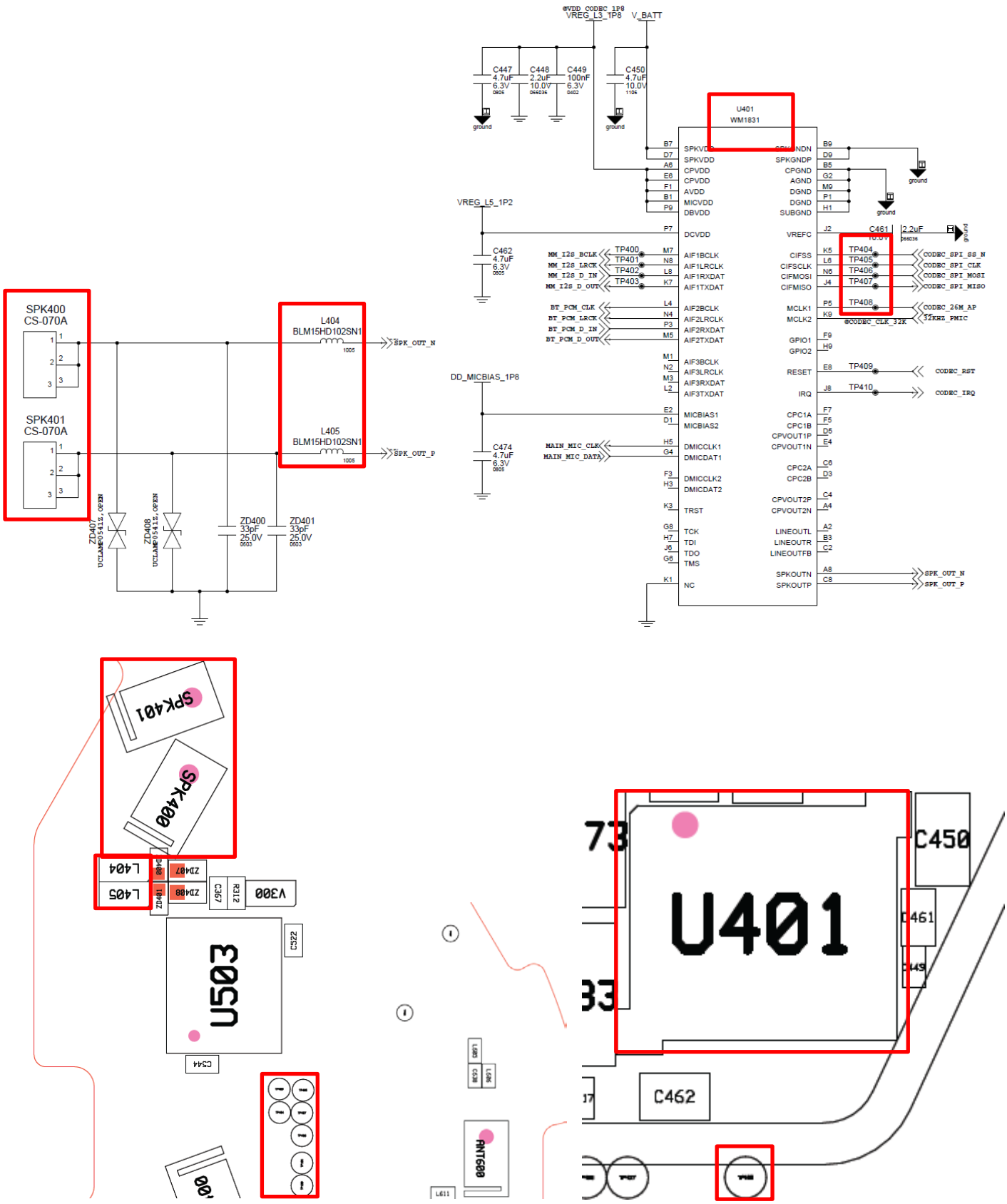

Confidential and proprietary-the contents in this service guide subject to change without prior notice
Distribution, transmission, or infringement of any content or data from this document without Samsung's written authorization is strictly prohibited.

8-4-12 RX (W2/W4/W5_B2/B4/B5)

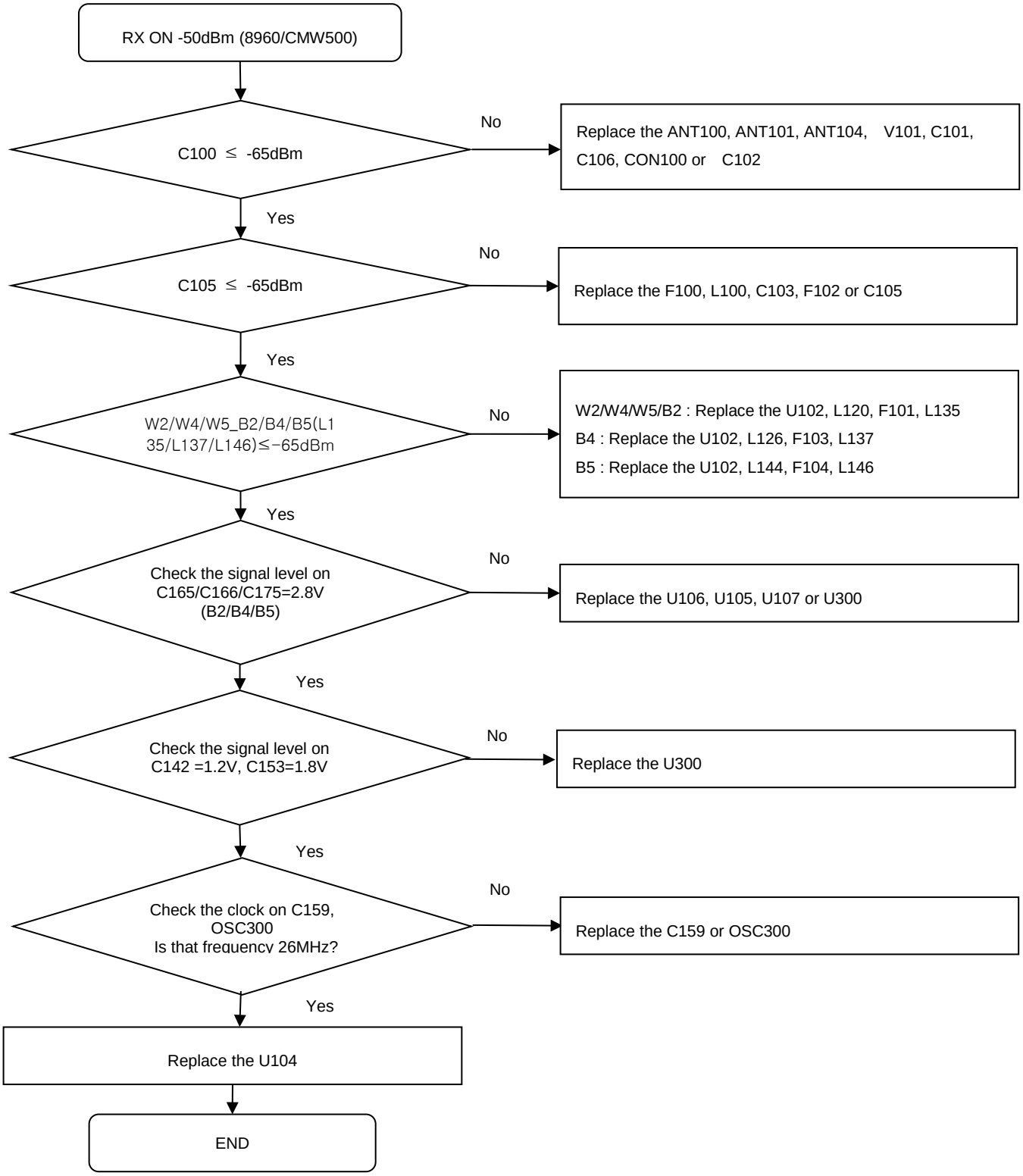

Confidential and proprietary-the contents in this service guide subject to change without prior notice
Distribution, transmission, or infringement of any content or data from this document without Samsung's written authorization is strictly prohibited.

8. Level 3 Repair

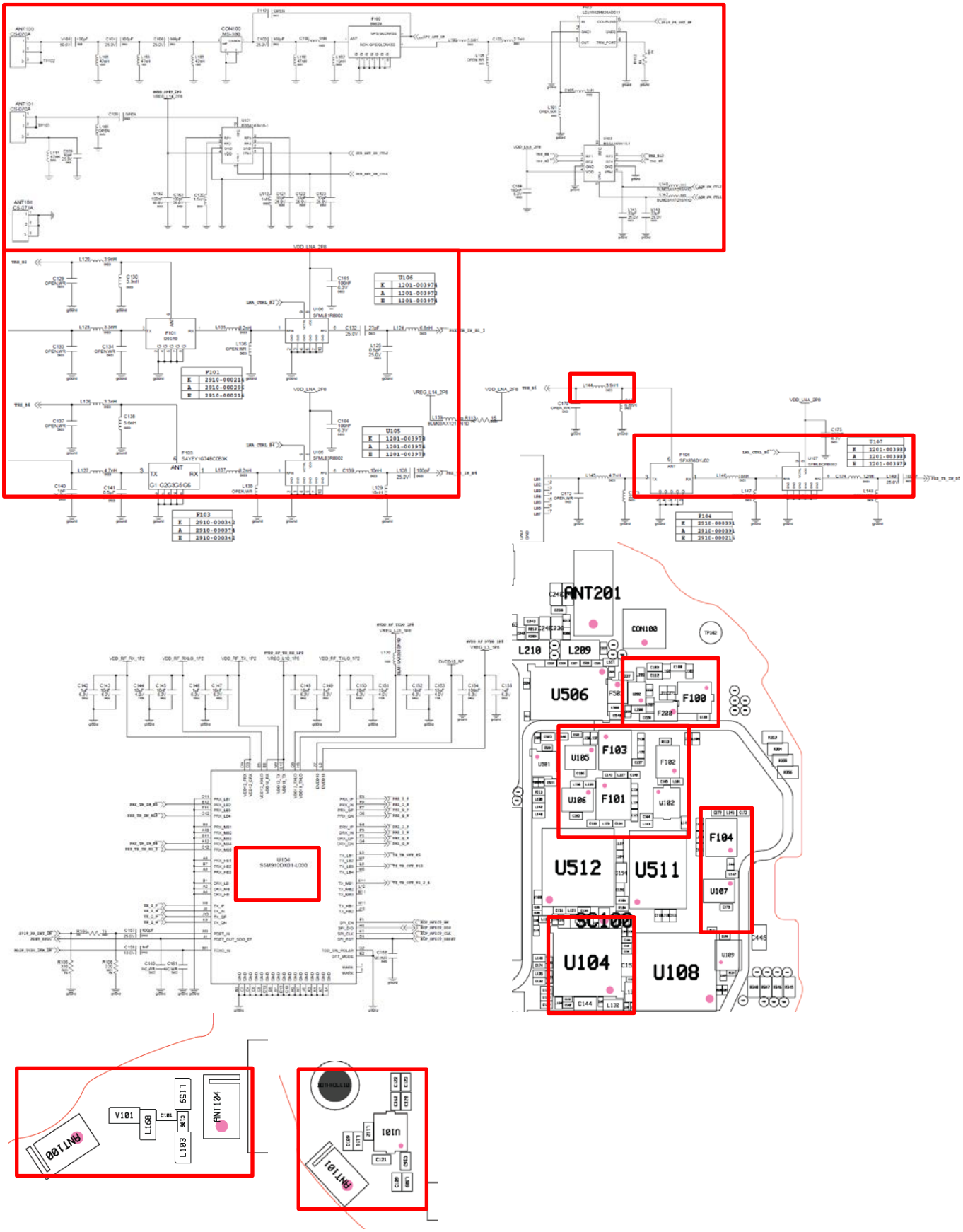

Confidential and proprietary-the contents in this service guide subject to change without prior notice

Distribution, transmission, or infringement of any content or data from this document without Samsung's written authorization is strictly prohibited.

8-4-13 TX (W2/W4/W5_B2/B4/B5)

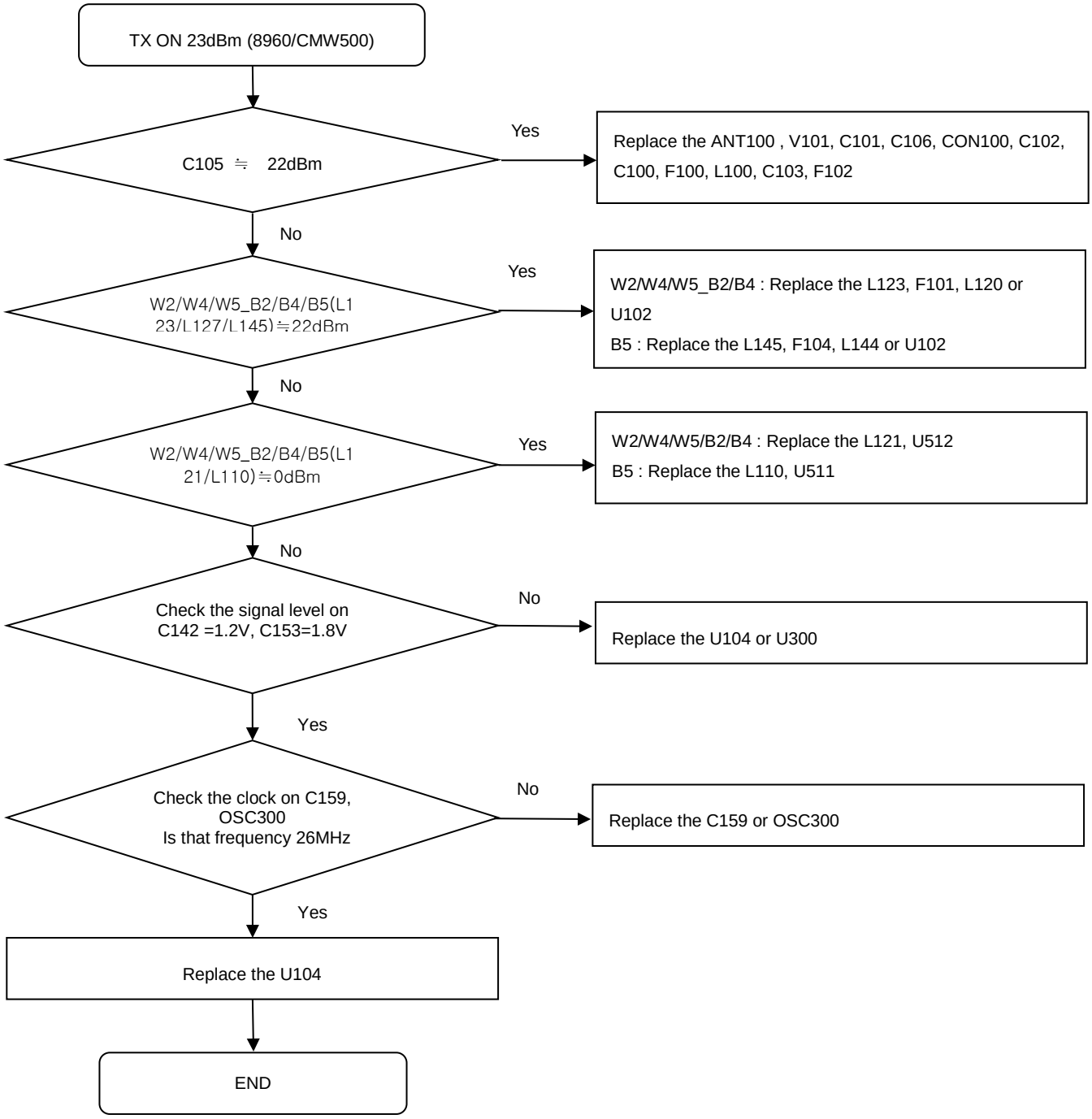

Confidential and proprietary-the contents in this service guide subject to change without prior notice
Distribution, transmission, or infringement of any content or data from this document without Samsung's written authorization is strictly prohibited.
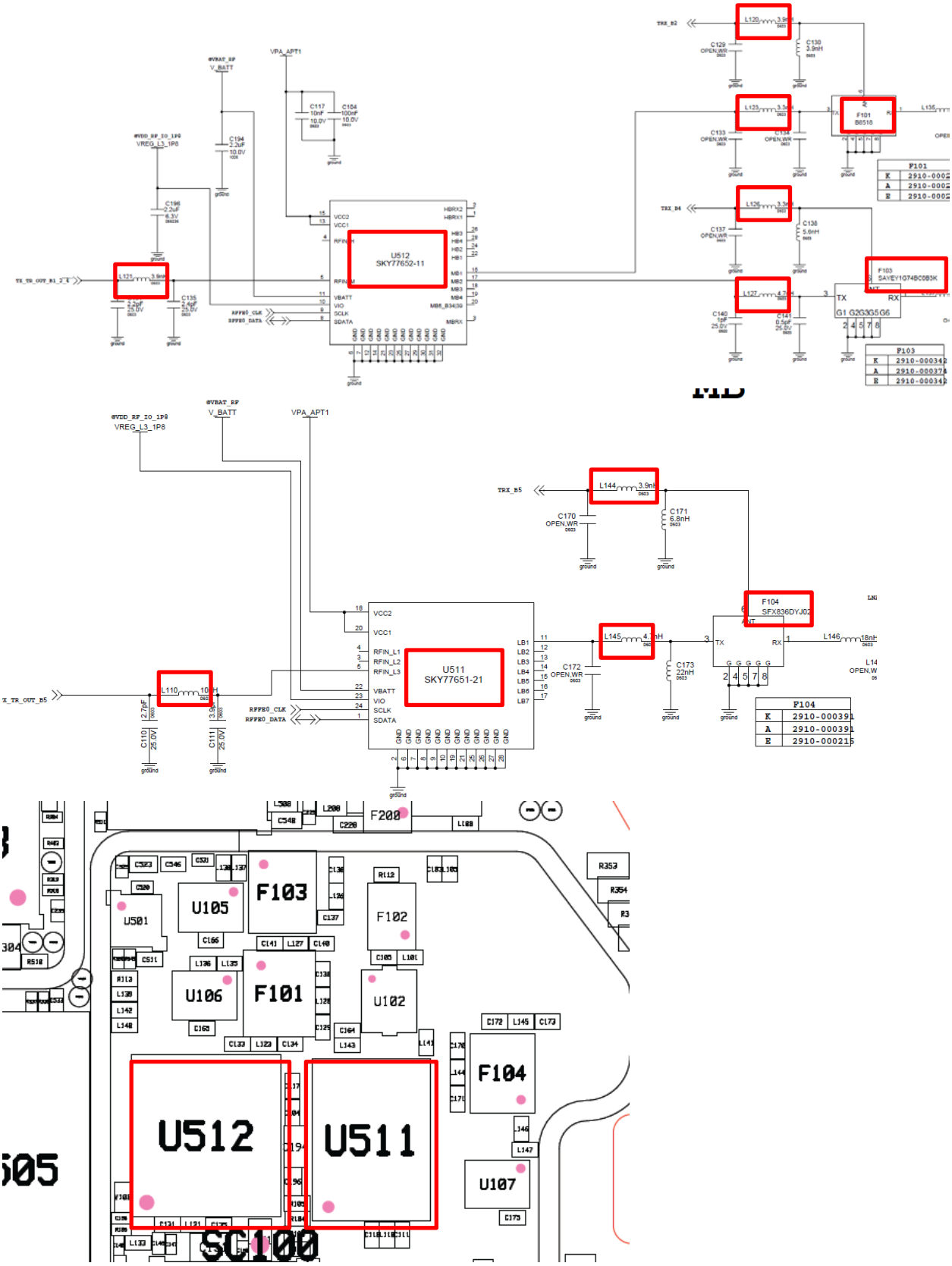
8. Level 3 Repair